TOSHIBA

FILE NO. 043-200101

SERVICE MANUAL

COLOUR TELEVISION

S0SS Chassis

43D9UXR

– SUMMARY –

43D9UXR is the same as 50D9UXE except for the parts and Convergence adustment and Mechanical disassembly tabled on back of this sheet.
Use this service manual together with the service manual of 50D9UXE, 50D9UXH, 50D9UXA (File No. 040-200009).

PRINTED IN JAPAN, Feb., 2001 Ⓣ

CONVERGENCE ADJUSTMENT

4. ADJUSTING PICTURE DIMENSION (GREEN PICTURE)

1. 50 Hz mode (PAL)

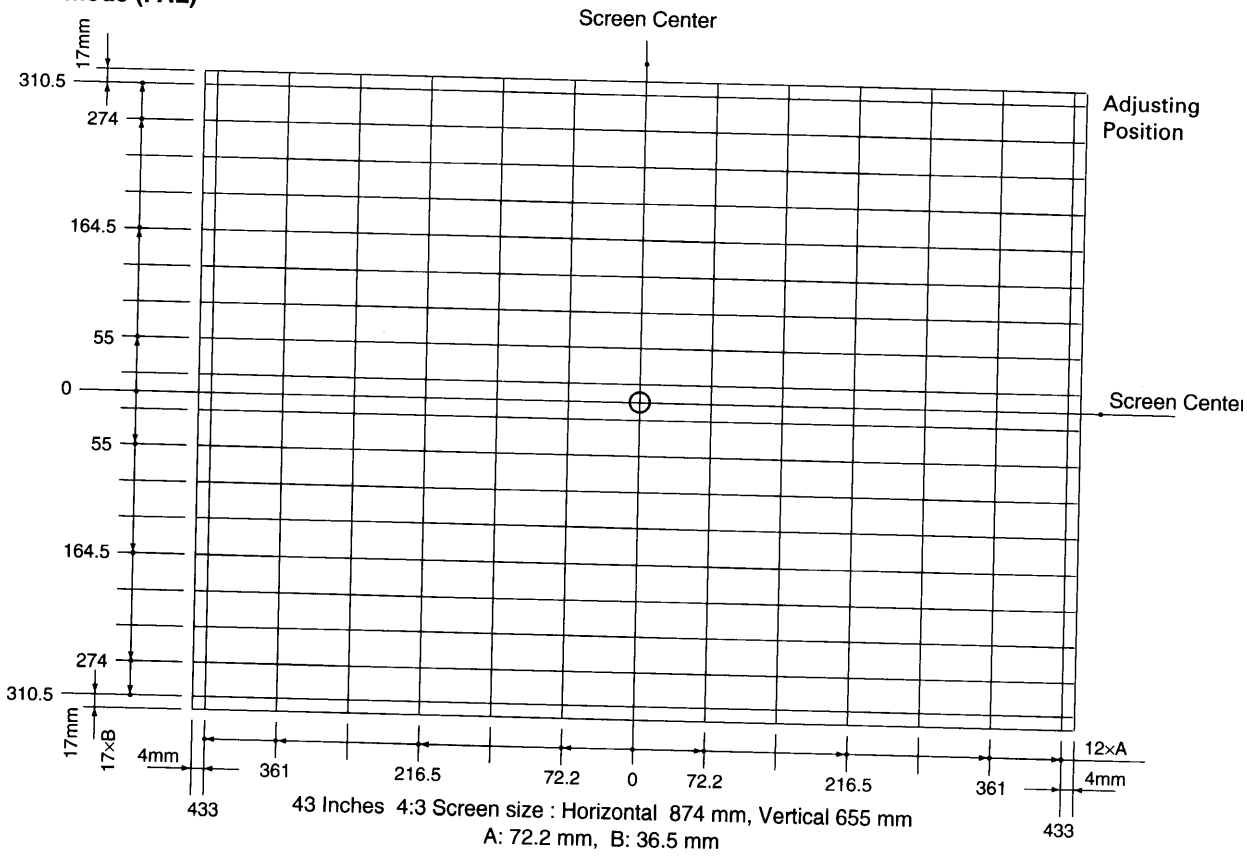

2. 60 Hz mode (NTSC)

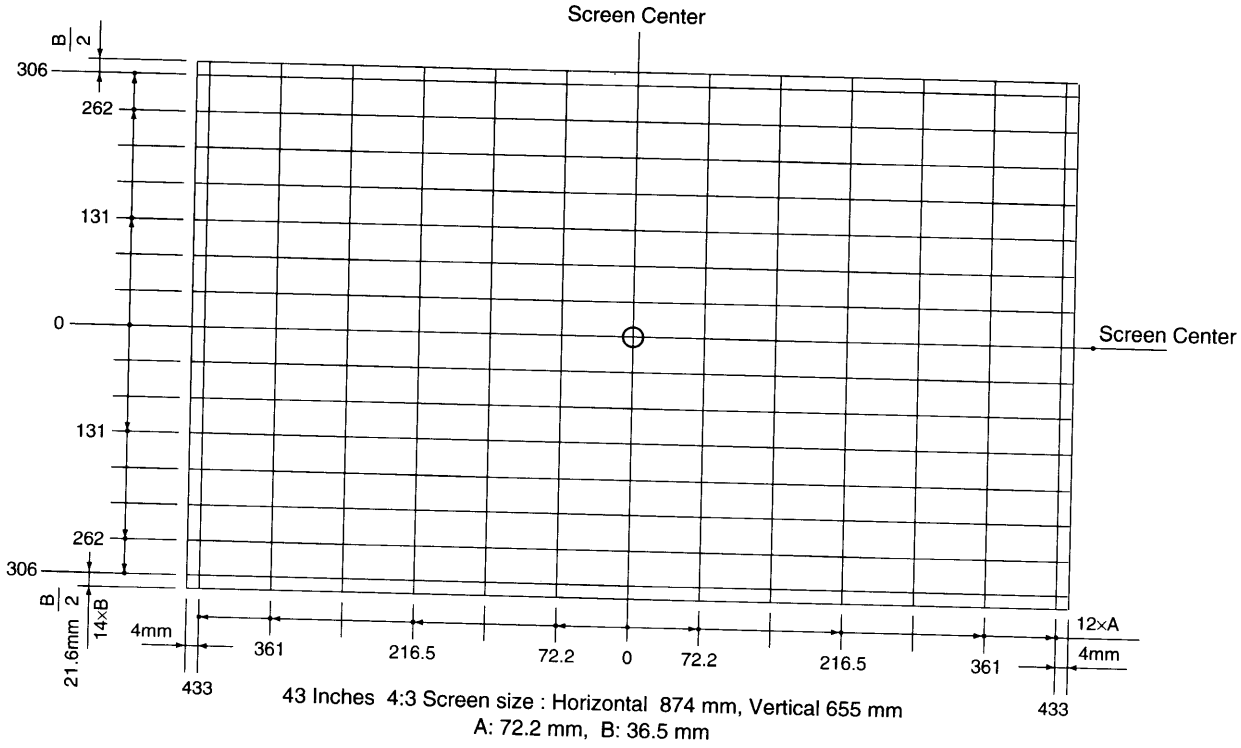

MECHANICAL DISASSEMBLY

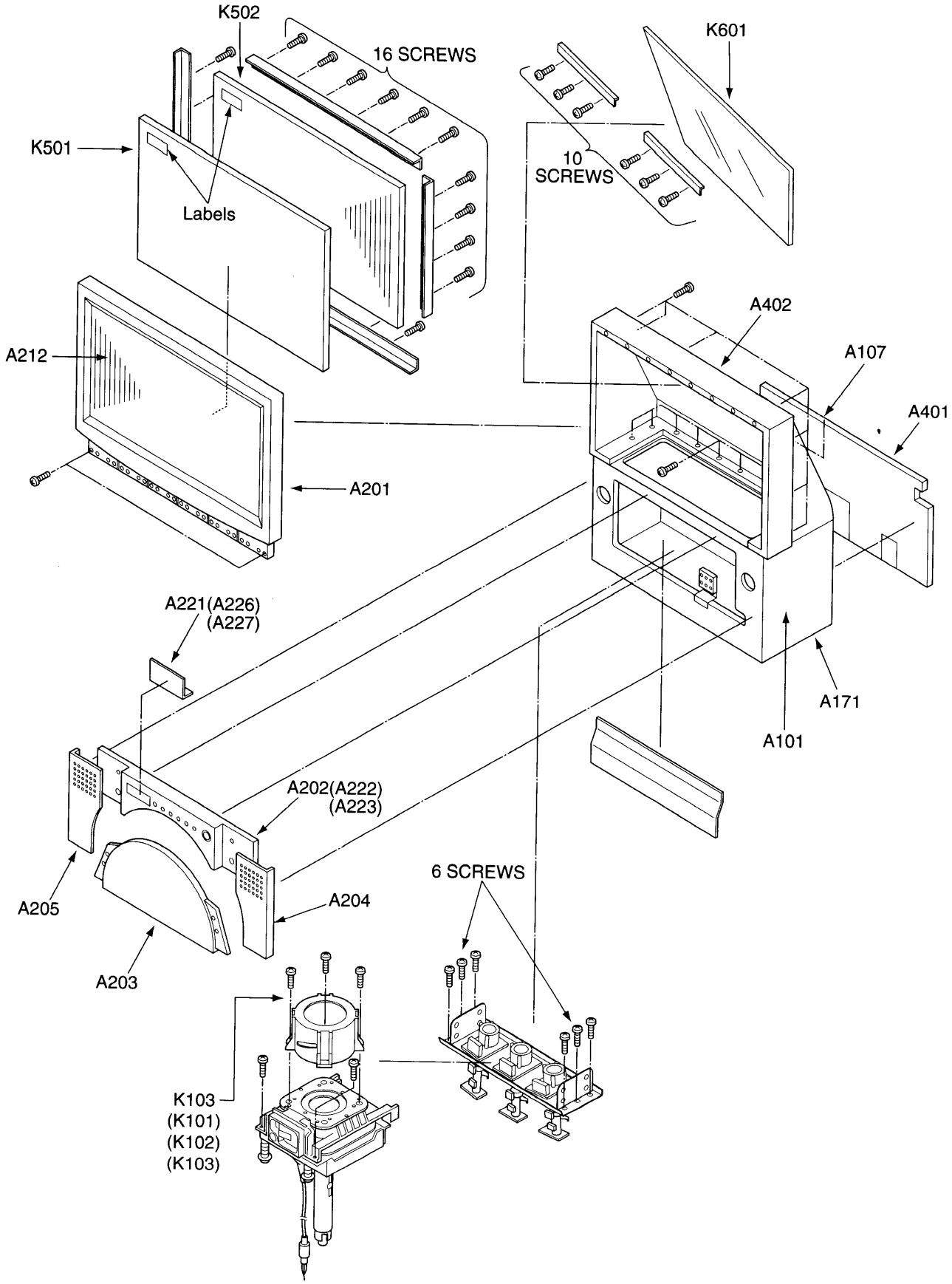

REPLACEMENT PARTS LIST DIFFERENCES

Location No.	Part No.	Description
A101	23411279	Wood Cabinet
A171	23436705	Foot
A201	23540222	Front Cover
A202	23450353	Front Cover Panel
A203	23450220	Front Cover
A204	23527151	Speaker Grille R
A205	23527153	Speaker Grille L
A212	23433138	Plate Front
A221	23427948	Door
A222	23445434	Button, Power
A223	23445435	Button, Control
A226	23451204	Push Catch
A227	23836492	Spring Coil
A268	70391333	Screw
⚠A401	23549702	Back Board Cover
A402	23549731	Mirror Cover
A406	23845485	Band L=118
A507	23035412	Screw, BTB4X12 SZN
A521	23035412	Screw, BTB4X12 SZN
A527	23035412	Screw, BTB4X12 SZN
A701	23064496	Case
A702	23935956	Packing, Top
A706	23943008	Cover Poly
A707	23064060	Case Bottom
A710	23935957	Packing, Bottom
A711	23531107	Packing, Protective Sheet
CV53	24794100	EL, 10μF, ±20%, 16V
CV54	24794100	EL, 10μF, ±20%, 16V
CV56	24794470	EL, 47μF, ±20%, 16V
CV57	24794100	EL, 10μF, ±20%, 16V
DB01	23358542	Diode, Zener, 339-1EVGW
K103	23430690	SSM65AB43
K501	23430927	Lenti Sheet, SCREEN43KKSL
K502	23430846	Fresnel Sheet, SCREEN43KKAF
K601	23430601	Mirror, MIRROR43J
K902	23306245	Remote Hand Unit, CT-9932
P801	23372052	Power Cord
QB01	23114528	Transistor, 2SC1740S, Q
QV52	23114528	Transistor, 2SC1740S, Q

Location No.	Part No.	Description
QV53	23114530	Transistor, 2SA933S, Q
QV55	23114530	Transistor, 2SA933S, Q
QV57	23114528	Transistor, 2SC1740S, Q
R610	24366272	CF, 2700 ohm
R611	24366272	CF, 2700 ohm
R612	24366472	CF, 4700 ohm
R613	24366472	CF, 4700 ohm
R614	24366682	CF, 6800 ohm
R615	24366682	CF, 6800 ohm
RV19	24366333	CF, 33k ohm
RV20	24366223	CF, 22k ohm
RV27	24366101	CF, 100 ohm
RV28	24366102	CF, 1k ohm
RV36	24366333	CF, 33k ohm
RV37	24366223	CF, 22k ohm
RV50	24366272	CF, 2700 ohm
RV51	24366101	CF, 100 ohm
RV53	24366272	CF, 2700 ohm
RV54	24366272	CF, 2700 ohm
RV55	24366223	CF, 22k ohm
RV56	24366473	CF, 47k ohm
RV57	24366392	CF, 3900 ohm
RV59	24366102	CF, 1k ohm
* M021Z	23783868	RMT IN Board, PB9211-1
* M022Z	23783869	FRT IN Board, PB9211-2
* M024Z	23783870	FRT CON Board, PB9211-4
* U901	23786042	Signal Board, PD0036
* UV01	23785790	BACK A/V Board, PB9904
⚠V901R	23007772	Protector Coupling R 43
⚠V902G	23007773	Protector Coupling 43D
⚠V903B	23007774	Protector Coupling 43D
W661	23351131	Speaker, SPK-1390
W662	23351131	Speaker, SPK-1390
Y101E	23565178	Owner's Manual, English, 43D9UXR
Y101R	23565179	Owner's Manual, Russian, 43D9UXR
ZC01	23148758	Module, CM43DP31H
ZY01	23148350	Module, MKMM31

TOSHIBA CORPORATION

1-1, SHIBAURA 1-CHOME, MINATO-KU, TOKYO 105-8001, JAPAN

TOSHIBA

FILE NO. 040-200009

SERVICE MANUAL

COLOUR TELEVISION

S0SS Chassis

50D9UXE, 50D9UXH, 50D9UXA

PRINTED IN JAPAN Sep., 2000 Ⓣ

TABLE OF CONTENTS

CHAPTER 1 GENERAL ADJUSTMENTS

SAFETY INSTRUCTIONS 3
CRT ASSEMBLY REPLACEMENT AND MOUNTING 4
PICTURE TUBE COMPONENTS ADJUSTMENT 6
SERVICE POSITION 9
SERVICE MODE 10
DESIGN MODE 13
ELECTRICAL ADJUSTMENT 14
CONVERGENCE ADJUSTMENT 17
SCREEN AND MIRROR ALIGNMENTS 22
CIRCUIT CHECKS 23

CHAPTER 2 SPECIFIC INFORMATIONS

SETTING & ADJUSTING DATA 24
LOCATION OF CONTROLS 25
PROGRAMMING CHANNEL MEMORY 27
CIRCUIT BLOCK DIAGRAM 29
MECHANICAL DISASSEMBLY 31
CHASSIS AND CABINET REPLACEMENT PARTS LIST 35
PC BOARDS BOTTOM VIEW 53
TERMINAL VIEW OF TRANSISTORS 65
SPECIFICATIONS 69
APPENDIX:
CIRCUIT DIAGRAM

SAFETY INSTRUCTIONS

WARNING: BEFORE SERVICING THIS CHASSIS, READ THE "X-RAY RADIATION PRECAUTION", "SAFETY PRECAUTION" AND "PRODUCT SAFETY NOTICE" INSTRUCTIONS BELOW.

X-RAY RADIATION PRECAUTION

1. Excessive high voltage can produce potentially hazardous X-RAY RADIATION. To avoid such hazards, the high voltage must not be above the specified limit. The nominal value of the high voltage of this receiver is (A) kV at zero beam current (minimum brightness) under a (C) V AC power source. The high voltage must not, under any circumstances, exceed (B) kV.

   Refer to table-1 for high voltage (A), (B) & AC voltage (C). (See SETTING & ADJUSTING DATA on page 24)

   Each time a receiver requires servicing, the high voltage should be checked following the HIGH VOLTAGE CHECK procedure in this manual. It is recommended that the reading of the high voltage be recorded as a part of the service record. It is important to use an accurate and reliable high voltage meter.
2. The only source of X-RAY RADIATION in this TV receiver is the picture tube. For continued X-RAY RADIATION protection, the replacement tube must be exactly the same type tube as specified in the parts list.
3. Some part in this receiver have special safety-related characteristics for X-RAY RADIATION protection. For continued safety, parts replacement should be undertaken only after referring to the PRODUCT SAFETY NOTICE below.

SAFETY PRECAUTION

WARNING : Service should not be attempted by anyone unfamiliar with the necessary precautions on this receiver. The following are the necessary precautions to be observed before servicing this chassis.

1. An isolation transformer should be connected in the power line between the receiver and the AC line before any service is performed on the receiver.
2. Always discharge the picture tube anode to the CRT conductive coating before handling the picture tube. The picture tube is highly evacuated and if broken, glass fragments will be violently expelled. Use shatter proof goggles and keep picture tube away from the unprotected body while handling.
3. When replacing a chassis in the cabinet, always be certain that all the protective devices are put back in place, such as; non-metallic control knobs, insulating covers, shields, isolation resistor-capacitor network etc.

PRODUCT SAFETY NOTICE

Many electrical and mechanical parts in this chassis have special safety-related characteristics. These characteristics are often passed unnoticed by a visual inspection and the protection afforded by them cannot necessarily be obtained by using replacement components rated for higher voltage, wattage, etc. Replacement parts which have these special safety characteristics are identified in this manual and its supplements; electrical components having such features are identified by the international hazard symbols on the schematic diagram and the parts list.
Before replacing any of these components, read the parts list in this manual carefully. The use of substitute replacement parts which do not have the same safety characteristics as specified in the parts list may create shock, fire, X-ray radiation or other hazards.

CRT ASSEMBLY REPLACEMENT AND MOUNTING

CAUTION : DO NOT LOOSEN THE HEX HEAD BOLTS WITH SPRINGS (12 PCS), BECAUSE THOSE ARE FOR SEALING OF CRT COOLANT.

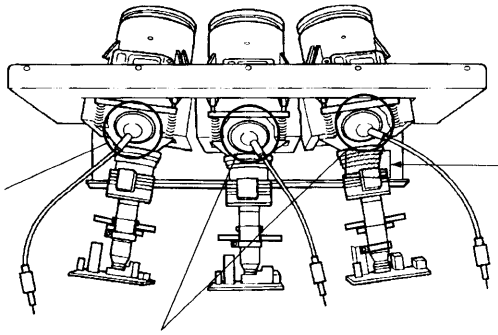

Attention Serviceman

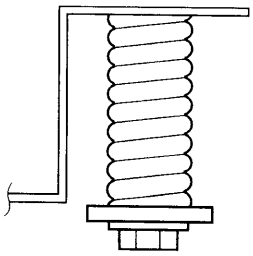

The Hex Head Bolts with Springs. (see sketch) used on CRT assembly, are "NOT" Adjustment Screws DO NOT LOOSEN-FLUID LEAKAGE WILL OCCUR.

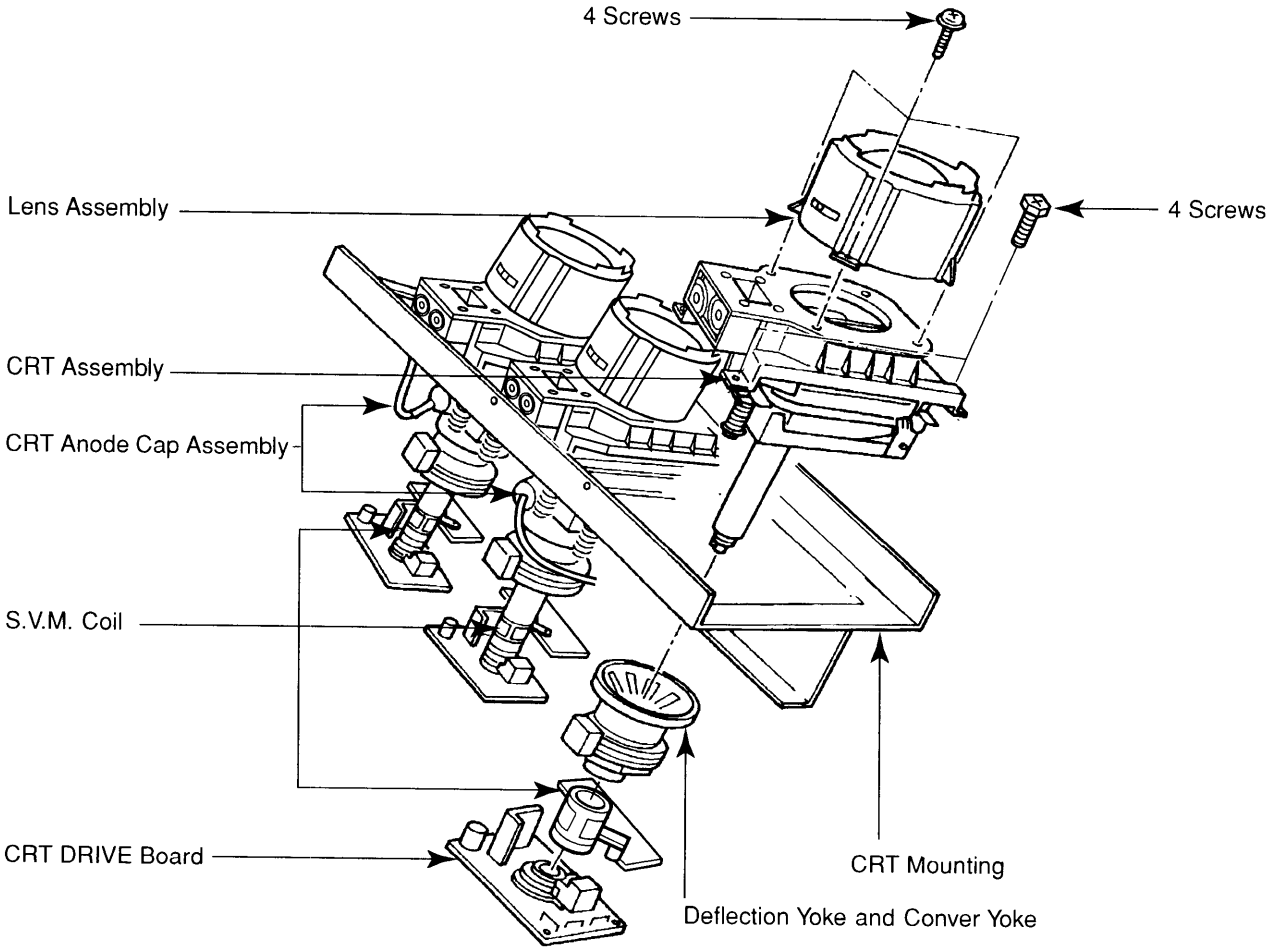

Lens and Neck Components View

TO REMOVE CRT (Same procedure for R, G, B)

1. Remove CRT DRIVE Board, S. V. M. COIL and DEF. YOKE from CRT.
2. Remove Lens Assembly.
3. Detach CRT Anode Cap from CRT.
4. Remove CRT Assembly from CRT Mounting.

CRT REPLACEMENT (Same procedure for R, G, B)
Reverse the removal procedures except the followings.

1. Anode Cable should be replaced with new one. See "SERVICING PRECAUTIONS" shown below.
2. Install silicon (T461B) to the CRT, replace the Anode cable and put enough silicon again on around the Anode Cap as illustrated.

CAUTION: Align the Anode cable as illustrated on page 4.

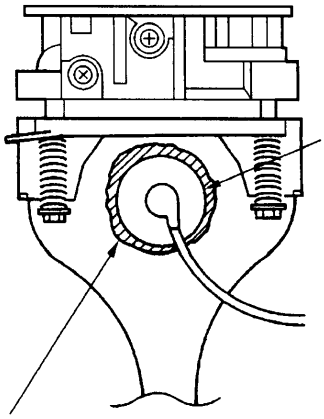

ADJUSTING PROCEDURE IN REPLACING CRT

1. R.G.B. CUTOFF (SCREEN VR) ADJUSTMENT (page 6.)
2. R.G.B. FOCUS ADJUSTMENT (page 6.)
3. PICTURE TILT ADJUSTMENT (page 7.)
4. USER CONVERGENCE CENTER CHECK (Refer to owner's manual.)
5. CENTERING ADJUSTMENT (page 7.)
6. CONVERGENCE ADJUSTMENT (page 17.)
7. WHITE BALANCE ADJUSTMENT (page 14.)

Adjustments are complete.

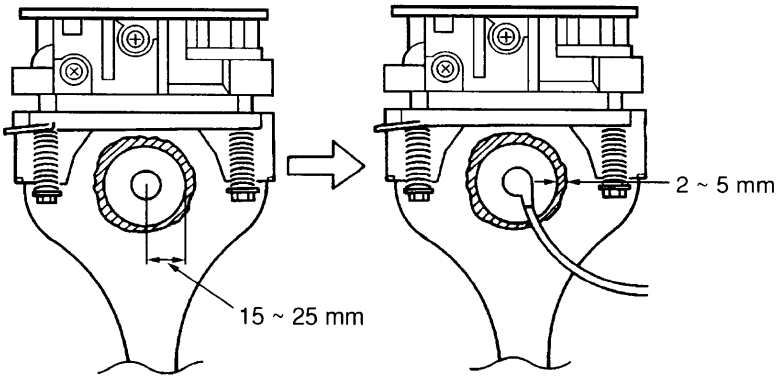

SERVICING PRECAUTIONS

- Do not use a magnetized screw driver for screws of Deflection Yoke and Velocity Modulation Coil to avoid magnetization of electron gun. Magnetization of electron gun will degrade basic function and result in unbalance of right and left shift of user static convergence, and result in no variable quantity.

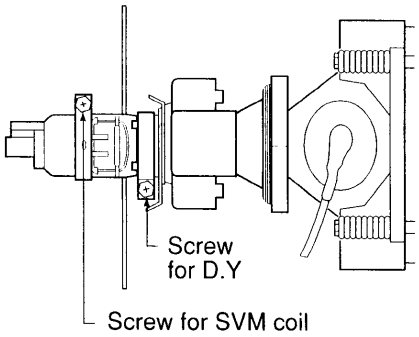

- When replacing the anode cap assembly (CRT) or anode lead assembly (F.B.T.), remove the anode lead holder from old one and attach the holder again to new anode lead.

- Check the point of anode lead in a straight line, if it is winding, please revise it.

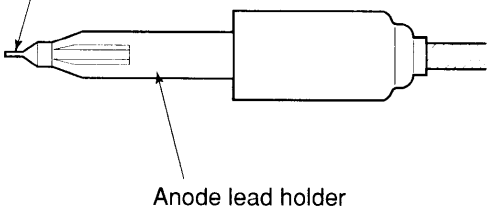

WARNING: BEFORE SERVICING THIS CHASSIS, READ THE "X-RAY RADIATION PRECAUTION", "SAFETY PRECAUTION" AND "PRODUCT SAFETY NOTICE" ON PAGE 3 OF THIS MANUAL.

PICTURE TUBE COMPONENTS ADJUSTMENT

ADJUSTING PROCEDURE IN REPLACING CRT

Cutoff
↓
Lens focus
↓
Electrical focus
↓
Yoke horizontal → User convergence center check
↓
Centering (PAL)
↓
Convergence adjustment (PAL/NTSC)
↓
White balance
↓
Sub bright adjustment
↓
End

DESCRIPTION OF NECK COMPONENTS

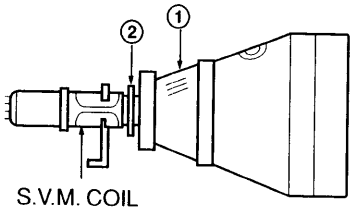

① Deflection yoke and convergence yoke.
The position on the neck is required most front (CRT funnel side) and the screw is fastened after rotating yoke adjusting picture tilt.

② Centering magnet
After adjusting picture tilt, picture position is finally fixed by this magnet.
In order to get maximum margin of user convergence control for center of screen, this magnet have to be used for center convergence adjustment.

PREPARATION
Operate the receiver for at least 5 minutes.

R, G, B CUTOFF (SCREEN VR) ADJUSTMENT

1. Adjust before replace the screen assembly.
2. Set user control to reset position.
   (CONTRAST → Max
   BRIGHTNESS, COLOR, TINT → Center.)
3. Call up the adjustment mode display, then select the item RCUT.
4. Adjust the data of items **RCUT**, **GCUT**, and **BCUT** to "40H".
5. Press the -/-- ("Info") button on Remote. (Y-MUTE : ON)
6. Gradually rotate R, G and B screen volume of FOCUS PAC clockwise or counterclockwise until the raster appears slightly on the CRT through the each lens, and leave them.
   (Lookin to the lens in order to check the raster.)
7. Press the -/-- ("Info") button on Remote. (Return to Normal) Picture)

RGB FOCUS ADJUSTMENT

1. Call-up the adjustment mode (see page 10)
2. Press ⊖ button on the remote controller in order to display the internally-generated black cross-hatch (See TEST SIGNAL SELECTION on page 11.)

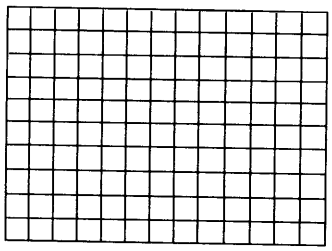

3. Expose only RED by covering the GREEN and BLUE lenses with caps.
4. Loosen the RED lens fixing screws (refer to Fig. a), and adjust the RED lens focus to obtain the sharpest point while observing the middle and peripheral sections of the screen.

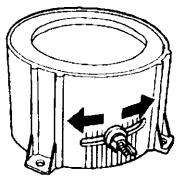

Fig. a

5. Use the focus VR of "R" of the focus pack in order to adjust the electric focus in the middle and peripheral sections of the screen to its sharpest level.
6. Check the RED focus of the whole screen and if necessary repeat steps 4 and 5.
7. Fix the RED lens by tightening its fixing screws.
8. Expose only GREEN by covering the RED and BLUE lenses with caps.
9. Display the internally-generated black cross-hatch signal.
10. Adjust the GREEN lens focus on the left border of the screen to its sharpest level, then check the focus on the right border, and if it is at its sharpest level, fix it in that position by tightening the lens screws.

    (1) If the horizontal line toward the right border is red-flared, turn the lens screw slightly right in order to balance it with the left border. (After adjustment, the left border tends to be slightly green-flared, and the right border tends to be slightly red-flared.)
    (2) If the horizontal line toward the right border is green-flared, turn the lens screw slightly left in order to balance it with the left border. (After adjustment, the left border tends to be slightly red-flared, and the right border tends to be slightly green-flared.)

Note: The aim of the above-described adjustment procedure for the Green lens focus is to obtain the best lens focus after 2 - 3 hours of warming up taking into account the focus drift; it applies if the warming up time before the adjustment is less than 30 minutes. (The horizontal line in the screen middle section tends to be slightly red-flared.)

In case of warming up of more than 2 hours under a condition that the large anode current is running through the projection tube so that for example the all-white pattern appears, adjust to obtain the sharpest focus while observing the whole screen like in the RED case.

11. Use the focus VR of "G" of the focus pack in order to adjust the electric focus in the middle section of the screen to its sharpest level.

Note: Normally the most clearly visible point of the scanning line is the sharpest point of the Green focus, however as the characteristics vary depending on the projection tube, the sharpest focus points of the vertical and horizontal lines may not match each other, thus when you turn the focus VR, if the picture tends to be tremendously unstable (rolls horizontally or vertically), adjust the balance of the vertical and horizontal lines to its best position.

12. Check the GREEN focus of the whole screen and if necessary repeat steps 10 and 11.
13. Fix the GREEN lens by tightening up its fixing screws.
14. Expose only BLUE by covering the RED and GREEN lenses with caps.
15. Display the internally-generated black cross-hatch.
16. Loosen the BLUE lens fixing screws (refer to Fig. a), and adjust the BLUE lens focus while observing the middle and peripheral screen sections.
17. Use the focus VR of "B" of the focus pack in order to adjust the focus in the middle section of the screen to its sharpest level.
    (The point of the Blue focus becomes sharpest when the brightness level of BLUE is lowest, the cross-hatch is clearly visible.)

Note: Keep in mind that only the BLUE electric focus is adjusted with the black cross-hatch.

18. Check the BLUE focus of the whole screen and if necessary repeat steps 17 and 19.
19. Fix the BLUE lens by tightening its fixing screws.

TILT ADJUSTMENT

Rotate R, G, B deflection yoke so that picture becomes horizon, then fasten screw.

CENTERING ADJUSTMENT

1. Stretch a thread between two center of screen edge (top and bottom, left and right).

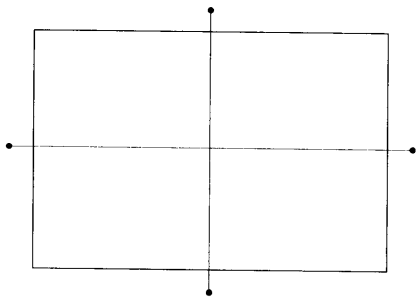

2. Select the adjustment mode. (See page 10.)
3. Press TV/VIDEO button on the Remote Control to display the black cross-hatch.

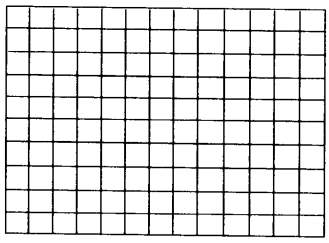

4. Adjust G centering magnet so that the cross-hatch pattern center comes to screen center.
5. Perform HEIGHT adjustment . (See page 14.)
6. Perform WIDTH adjustment. (See page 14.)
7. Check whole quality of green line.
8. Adjust R, B centering magnet so that the cross-hatch pattern center comes to screen center.

LOCATION OF SCREEN AND FOCUS VR'S

To remove the Speaker grille and Front panel.

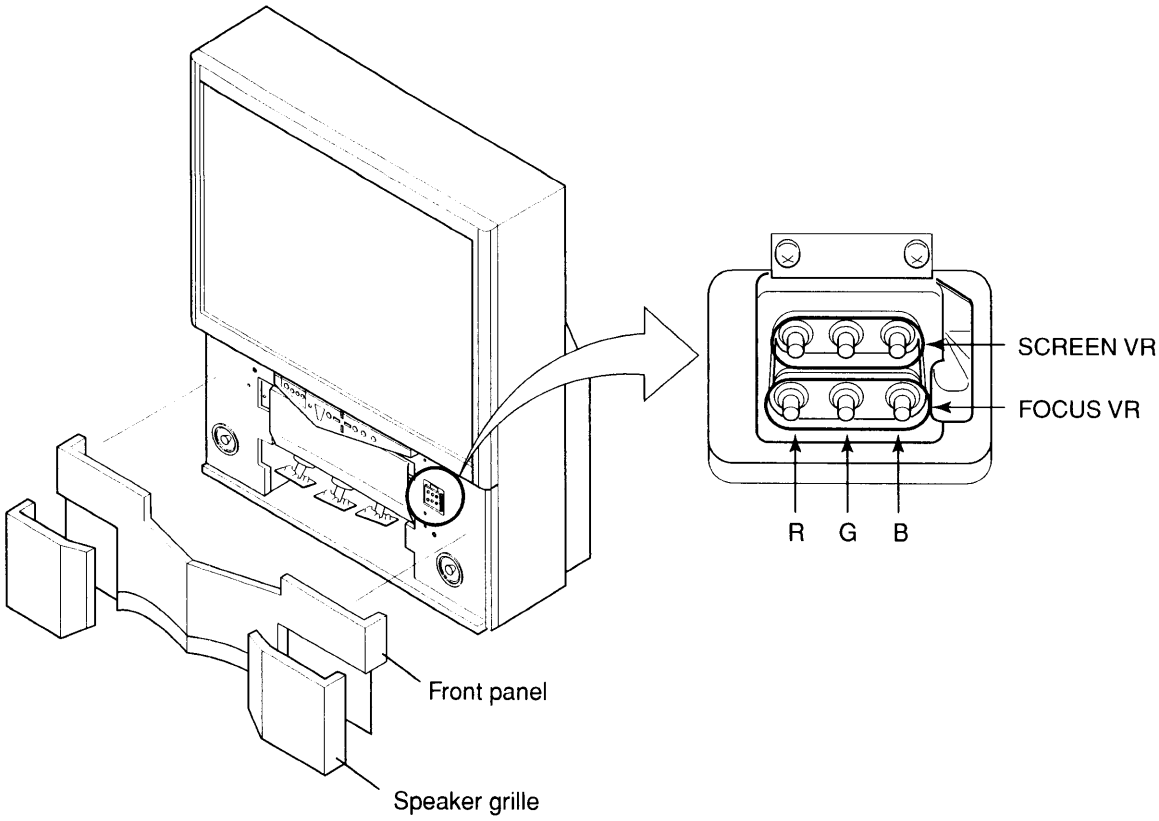

REPLACEMENT OF HIGH VOLTAGE CABLE

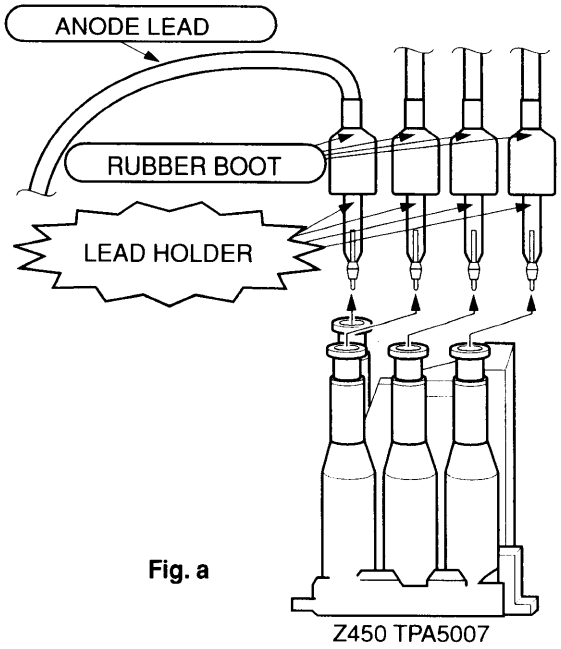

Fig. a

1. When replacing Anode Lead or Anode Cap with new one, remove Lead Holder from old lead as shown in figure below, and put it on new lead. Do not throw away Lead Holder.

NOTE : THE LEAD HOLDER IS ATTACHED TO TPA5007 (Z450), BUT IS NOT ATTACHED TO ANODE LEAD AND ANODE CAP. RUBBER BOOT IS ATTACHED TO ANODE LEAD AND ANODE CAP.

2. Detaching Lead Holder

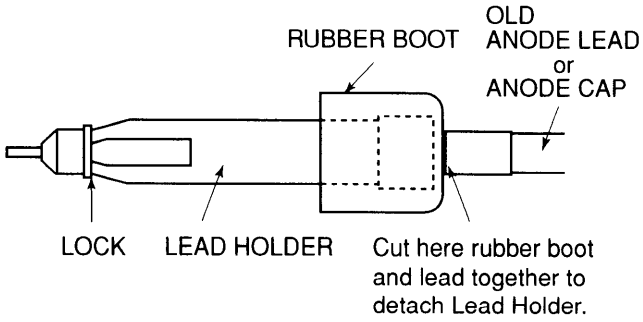

Fig. b

WARNING: BEFORE SERVICING THIS CHASSIS, READ THE "X-RAY RADIATION PRECAUTION", "SAFETY PRECAUTION" AND "PRODUCT SAFETY NOTICE" ON PAGE 3 OF THIS MANUAL.

SERVICE POSITION

In order to assure the performance, processed wires shall be replaced after the repair work.
Work procedures are as follows:

1. Remove the back board.
2. Remove lead wires.
3. Draw out the chassis.
4. Insert the front edge of the chassis into the groove where the back board has been inserted and make the chassis stand.
5. Put one screw on cabinet by depth of their length for fixing back board, and then, temporarily use them to hold the CONV/POWER chassis with wires tied to screws or insert the PVC band into the opening of main board frame to fix the main board chassis.

After repair work finished, replace it in the opposite procedure.

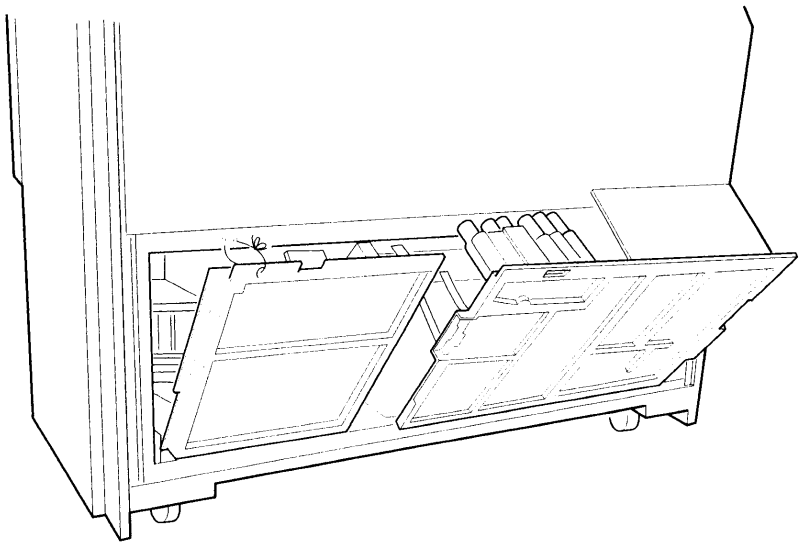

SERVICE MODE

1. ENTERING TO SERVICE MODE

1) Press 🔇 button once on Remote Control.
2) Press 🔇 button again to keep pressing.
3) While pressing the 🔇 button, press MENU button on TV set

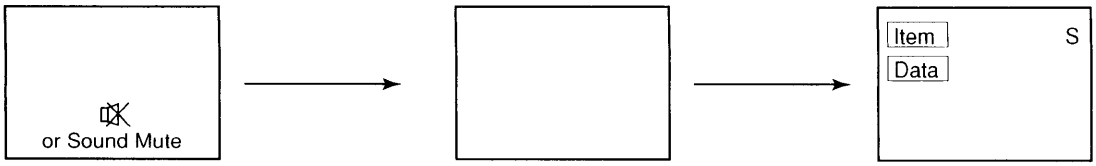

(Service mode display)

2. DISPLAYING THE ADJUSTMENT MENU

1) Press MENU button on TV.

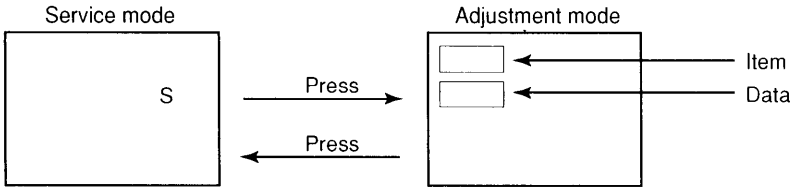

3. KEY FUNCTION IN THE SERVICE MODE

The following key entry during display of adjustment menu provides special functions.

Screen adjustment mode ON/OFF:	-/-- ("Info") button (on Remote)
Test signal selection :	-⊖ button (on Remote)
Selection of the adjustment items :	Channel ▲/▼ (on TV or Remote)
Change of the data value :	Volume ◿ +/– (on TV or Remote)
Adjustment menu mode ON/OFF :	MENU button (on TV)
Initialization of the memory (QA02) :	CALL + Channel button on TV (▲)
Reset the count of operating protect circuit to "00":	CALL + Channel button on TV (▼)
"RCUT" selection :	1 button
"GCUT" selection :	2 button
"BCUT" selection :	3 button
"SCNT" selection :	4 button
"COLC" selection :	5 button- - - - - Color thickness correction
"TNTC" selection :	6 button note: Displayed differently as shown below, depending on the setting of the receiving color system.
Convergence adj :	YELLOW button
Self diagnostic display ON/OFF :	9 button

COLP (PAL)
COLC (NTSC)
COLS (SECAM)

CAUTION : Never try to perform initialization unless you have changed the memory IC.

4. SELECTING THE ADJUSTING ITEMS

1) Every pressing of CHANNEL ▲ button in the service mode changes the adjustment items in the order of table-2. (▼ button for reverse order)

Refer to table-2 for preset data of adjustment mode. (See SETTING & ADJUSTING DATA on page 24)

5. ADJUSTING THE DATA

1) Pressing of VOLUME ◿ +/– button will change the value of data in the range from 00H to FFH. The variable range depends on the adjusting item.

6. EXIT FROM SERVICE MODE

1) Pressing POWER button to turn off the TV once.

■ INITIALIZATION OF MEMORY DATA OF QA02

After replacing QA02, the following initialization is required.

1. Enter the service mode, then select any register item.
2. Press and hold the CALL button on the Remote, then press the CHANNEL ▲ button on the TV. The initialization of QA02 has been complated.
3. Check the picture carefully. If necessary, adjust any adjustment item above.
   Perform "Auto search Memory" on the owner's manual.

CAUTION: Never attempt to initialize the data unless QA02 has been replaced.

7. TEST SIGNAL SELECTION

1) Every pressing of ⊖ button on the Remote Control changes the built-in test patterns on screen as described below in SERVICE MODE.

Signal off → PAL signals (5 patterns) → NTSC signals (5 patterns) → Signal off

Signals	Picture
• Red raster • Green raster • Blue raster • All White	
• Black cross-hatch	

* The signals marked with ▒ are not usable to display in the Test signal for some model.

8. SELF DIAGNOSTIC FUNCTION

1) Press "9" button on Remote Control during display of adjustment menu in the service mode.
   The diagnosis will begin to check if interface among IC's are executed properly.
2) During diagnosis, the following displays are shown.

```
<SELF CHECK>

① 2300****
② TIME      : 000000
③ POWER     : 00
④ BUS CONT  : OK
⑤ BLOCK     : UV V1 V2 V3
              QV01
```

Indicated color of mode now selected : Green and Red
Indicated color of other modes : White

Green : Normal
Red : The microcomputer operates to provide judgement of no video signal. The red color is still indicated though the signal is input, failure may exist in input signal line including QV01.
QV01 : In case of indication green ---Normal
In case of indication red with input signal----
Failure may exist in output line including QV01.

① Part number of microcomputer (QA01)
② Total hour of turn the Power on. (unit: hour)
③ Operation number of protecting circuit ----"00" is normal.
When indication is other than "00", overcurrent apts to flow, and circuit parts may possibly be damaged.
④ BUS CONT ----"OK" is normal.
When indication shows "Q ○○○ (Green: OK, Red: NG)", the device with the number may possibly be damaged.
⑤ BLOCK
UV : TV reception mode
V1 : VIDEO 1 input mode (-⊖1)
V2 : VIDEO 2 input mode (-⊖2)
V3 : VIDEO 3 input mode (-⊖3)

* The items marked with ▒ are not usable to display in the SELF DIAGNOSTIC FUCTION for some model.

DESIGN MODE

1. ENTERING TO DESIGN MODE

1) Select the Service mode. 2) While pressing CALL button on Remote and press MENU button on TV. 3) Press MENU button on TV.

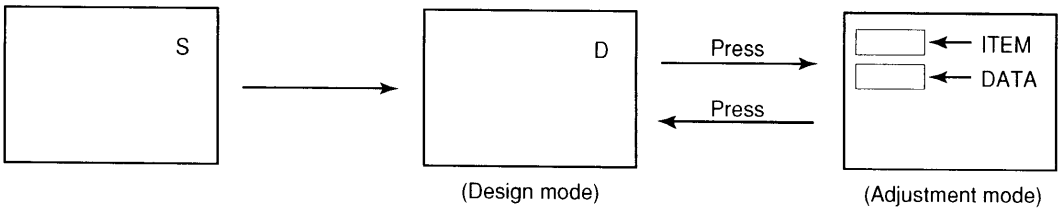

When QA02 is initialized, items "OPT0" and "OPT1" of DESIGN MODE are set to the data of the representative model of this chassis family.
Therefore, because ON-SCREEN specification remains in the state of the representative of model. This model is required to reset the data of items "OPT0" and "OPT1".

2. SELECTING THE ADJUSTING ITEMS

Every pressing of CHANNEL ▼ button in the design mode changes the adjustment items in the order of table-3. (▲ button for reverse order)

Refer to table-3 for data of design mode.
(See SETTING & ADJUSTING DATA on page 24)

3. ADJUSTING THE DATA

Pressing of VOLUME ▲ or ▼ button will change the value of data.

ELECTRICAL ADJUSTMENT

ITEM	ADJUSTMENT PROCEDURE
WIDTH (WID)	1. Call up the adjustment mode display, then select the item **WID**. 2. Press the VOLUME ▼ button to get the picture so the left or right edges of raster begins to lack. 3. Press the VOLUME ▲ button to advance the data by 15 steps. Note : Check the horizontal picture position is correct.
VERTICAL LINEARITY (VLIN)	1. Call up the adjustment mode display, then select the item **VLIN**. 2. Press the TV/VIDEO button on Remote until the cross-hatch pattern appears on the screen. 3. Press the VOLUME ▲ or ▼ button to obtain the picture of the best linearity 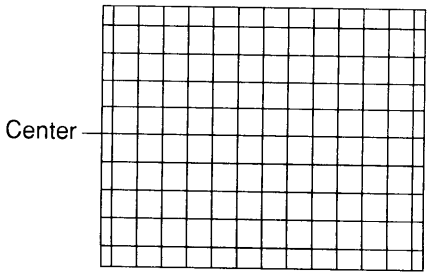 Center
HEIGHT (HIT)	1. Call up the adjustment mode display, then select the item **HIT**. 2. Press the VOLUME ▼ button to get the picture so the top or bottom of raster begins to lack. 3. Press the VOLUME ▲ button to advance the data by 9 steps. Note : Check the vertical picture position is correct.
WHITE BALANCE (RCUT) (GCUT) (BCUT) (RDRV) (BDRV)	Black and White pattern 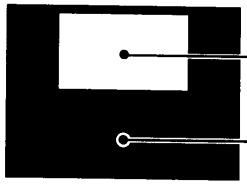 High light area Adjust "RDRV" or "BDRV" to be white. Low light area Fine adjust "RCUT", "GCUT" or "BCUT" to be black. 1. Set user control to reset position. (CONTRAST → Max BRIGHTNESS, COLOR, TINT → Center.) 2. Call up the adjustment mode display, then select the item RCUT. 3. Adjust the data of items **RCUT**, **GCUT**, and **BCUT** to "40H". 4. Press the -/-- button on Remote. (Y-MUTE : ON) 5. Gradually rotate R, G and B screen volume of FOCUS PAC clockwise or counter-clockwise until the raster appears slightly on the CRT through the each lens, and leave them. (Lookin to the lens in order to check the raster.) 6. Press the -/-- button on Remote. (Return to Normal Picture) 7. Press the -⊖ button on Remote, and select the Black and White pattern. 8. Adjust the data of items **RCUT**, **GCUT** and **BCUT** for proper white-balanced picture in low light area. 9. Adjust the data of items **RDRV** and **BDRV** for proper white-balanced picture in high light area. 10. Check the white balance in both low and high light areas. If necessary, perform again steps from 8 to 9.

Item	Name	Setting (User control)	Input signal	Measurement point	Adjustment procedure	Adjustment standard
[SCNT]	Sub-contrast	Reset 1 mode	Sub-bright signal (PAL-I signal)	Q501 (TP46B)	Adjust the amplitude from the pedestal level to the white peak.	2.4 ± 0.1 V p-p
[BRTC]	Sub-bright center	Reset 1 mode	Sub-bright signal	Screen adjustment	1) Adjust the number of collapsed black lines of sub-bright signal. 2) This adjustment shall be done after W/B [SCNT] adjustment.	4 ± 1.5 lines
[COLP]	Sub-color center PAL	Reset 1 mode	Sub-bright signal (PAL)	Q501 (TP46B)	1) Adjustment the colour bar amplitude. 2) Adjust the P-P value of the upper half.	1.25 ± 0.1 V p-p
[BELL]	BELL filter		SECAM colour bar	QQ01 (TMP01)	1) Adjust [BELL] so that the wavetorm on the synchroscope becomes flat. 2) Perform this adjustment at the white part.	100 ± 10 %
[SRY]	SECAM R-Y black level		SECAM colour bar	Q501 (TP02)	1) Adjust [SRY] so that the level of B/W signal becomes the same as the H.BLK level. 2) This adjustment shall be done after [BELL] adjustments.	0 ± 10 mV
[SBY]	SECAM R-Y black level		SECAM colour bar	Q501 (TP01)	1) Adjust [SBY] so that the level of B/W signal becomes the same as the H.BLK level. 2) The adjustment shall be done after [BELL] adjustments.	0 ± 10 mV
[COLS]	Sub-colour center SECAM	Reset 1 mode	SECAM colour bar	Q501 (TP46B)	1) Adjust the amplitude of colour bar. (Apply picture mute for this adjustment.) 2) Adjust the P-P value of the upper half.	1.8 ± 0.2 Vop
Screen adjustment	Screen	Factory screen adjsutment mode		CRT tube surface	1) Make the surrounding as dark as possible. 2) Set to the factory screen adjustment mode (Y mute, DRV. CUT= 40H) 3) Observing the CRT tube surface directly, adjust the screen VR to the point where the tube starts to be bright. 4) Perform this adjustment for each R, G and B tube.	Point where the tube starts to glow.
Focus adjustment	Focus	Reset 1 mode	RETMA (PAL-1)	Screen Adjustment	1) Repeat the electric focus and optical focus adjustments for the best position. 2) As to CRTs other than the one for the adjustment, shield them with a jig. 3) Perform this adjustment for each R, G and B tube.	
[RDRV] [BDRV]	White balance at bright part			Screen Adjustment	Adjust the colour temperature at the bright part (103cd/m^2).	11500K-0.002uv
[RCUT] [BCUT]	White balance at dark part			Screen Adjustment	Adjust the colour temperature at the dark part (17cd/m^2).	10500K-0.002uv

Item	Name	Setting (User control)	Input signal	Measurement point	Adjustment procedure	Adjustment standard
V-Balance voltage adj.	V-Balance voltage	DYANAMIC	Phillips pattern	TP-V–TP-G	Hook it up with a digital voltmeter, and adjust the DC voltage according to VPOS data.	10 ± 10 mV
Vertical position adjustment		DYNAMIC	Phillips pattern (PAL-I)	Screen adjustment	1) Adjust the centering magnet so that the vertical position comes to the center of the dummy screen (cross pattern). 2) Do not change [VPOS] data.	
Horizontal position adjustment		DYNAMIC	Phillips pattern (PAL-I)	Screen adjustment	1) Adjust the centering magnet so that the horizontal position comes to the center of the dummy screen (cross pattern). 2) Do not change [HPOS] data.	
[HIT] [VLIN]	Vertical amplitude adjustment	DYNAMIC	Phillips pattern (PAL-I)	Screen adjustment	Adjust the vertical amplitude so that top and bottom flags disappear. (Align the vertical center of the pattern with the center mark of the mask.)	
[WID]	Horizontal amplitude adjustme	Reset 1 mode	Phillips pattern (PAL-I)	Screen adjustment	Adjust the horizontal amplitude so that the left and right flags disappear.	

Unit adjustment : DIGITAL-CONVER

Item	Name	Setting (User control)	Input signal	Measurement point	Adjustment procedure	Adjustment standard
PLL frequency adjustment				Q709 emitter	1) Apply the following voltages to the respective terminals of P701. +5V to the terminals #15 and #16 +9V to the terminals #13 -9V to the terminals #14 2) By L719, adjust the frequency of the emitter Q709.	32 ± 0.1 kV

CONVERGENCE ADJUSTMENT

1. PICTURE ADJUSTMENT

The adjustment are done on two screens; 50 Hz mode (PAL) and 60 Hz mode (NTSC). To synchronize correction wave to each frequency, receive the suitable signal.

1-1. Change of Memory (E^2PROM)

Memory of QH173 E^2PROM is nonvolatile, and adjusted data is stored. Since data in RAM of QH001 is eliminated with power OFF, the RAM is set by soft command of microcomputer QA01 at every power ON. The adjusted data which is obtained from screen-watching is once stored in RAM inside QA01. The whole data in RAM which is corrected on each adjusting point and is changed, is saved into E^2PROM (QH173) as a fixed data. The data capacity per one screen requires 8k for 50 Hz mode (PAL), and 4k for 60 Hz mode (NTSC).

1-2. Service Mode

1-2-1. Outline

Service mode is controlled by software of microcomputer QA01, and is one of function of set.

This mode is designed so that ordinary user cannot use this, and special operation is required to use this.

Data change is done by direct shift (cursor display) of adjusting points; 50 Hz mode (PAL) 8 × 8/1 color and 60 Hz mode (NTSC) 8 × 8/1 color.

1-2-2. To Enter and to Exit

Press MUTE key on remote hand unit twice and keep pressing the key, press MENU key of set console.

Then service data will be displayed on top left of screen. Under the condition, press " ⇥♪⇤ " key on remote hand unit, and the screen shows crosshatch picture (Later, the first picture). Press again " ⇥♪⇤ " key, and the screen changes to crosshatch + data display (Later, second picture). This time changed data are automatically saved

Further, press " ⇥♪⇤ " key on remote, the screen returns to original picture.

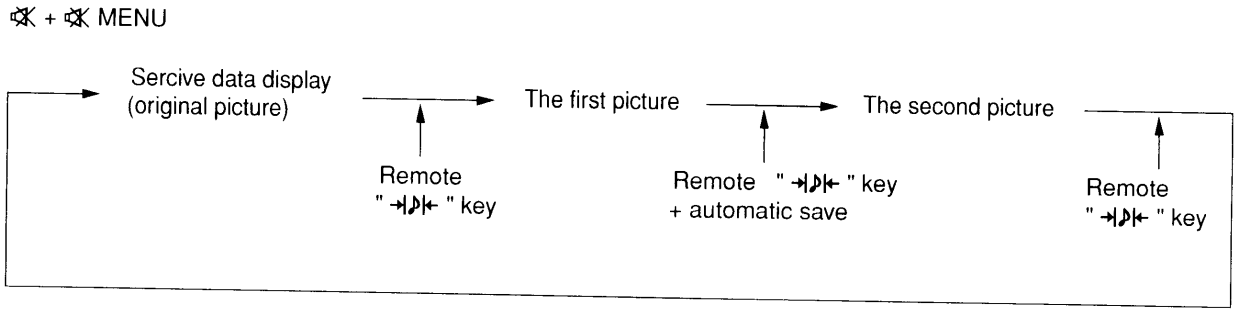

Fig. 10 -1

Adjusting Procedure In Replacing Convergence Unit/Main Def

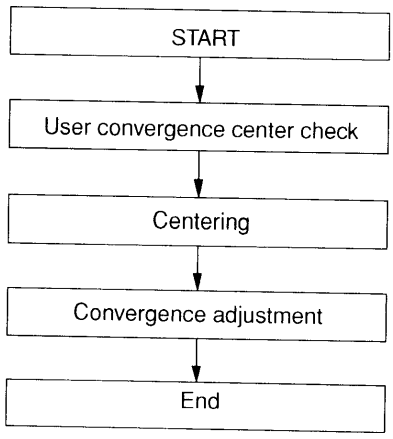

2. KEY FUNCTION OF REMOTE CONTROL UNIT

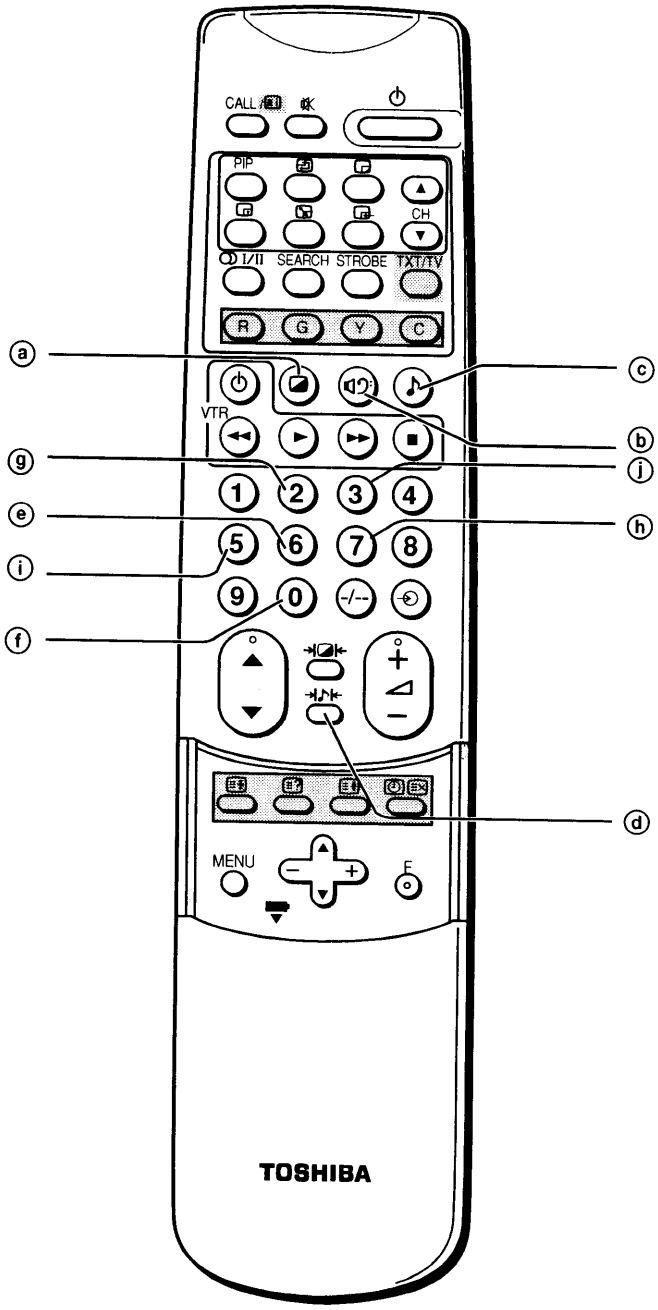

ⓐ key ..... Red test pattern ON/OFF

ⓑ key ..... Green test pattern ON/OFF

ⓒ ♪ key ..... Blue test pattern ON/OFF

ⓓ key ..... Mode picture change-over

ⓔ 6 key ..... Cursor shift / data change mode change-over

ⓕ 0 key ..... Cursor down / adjusting point dow

ⓖ 2 key ..... Cursor up / adjusting point up

ⓗ 7 key ..... Cursor right / adjusting point right

ⓘ 5 key ..... Cursor left / adjusting point left

ⓙ 3 key ..... Cursor color change

Fig. 2

3. Picture

a) 50 Hz mode (PAL) . . . . Correcting point: Horizontal 8 × Vertical 8 (Arrow marks denote correcting point)

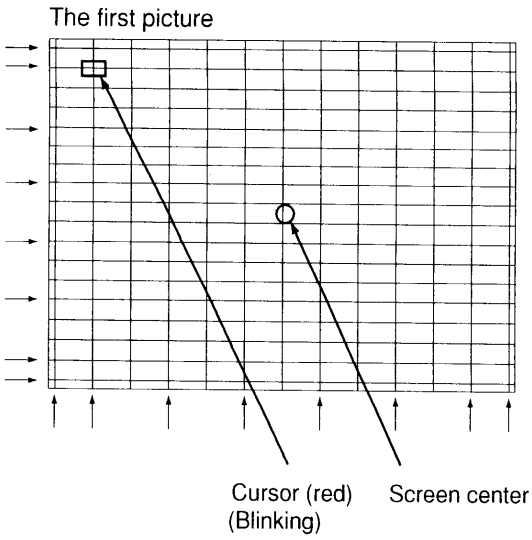

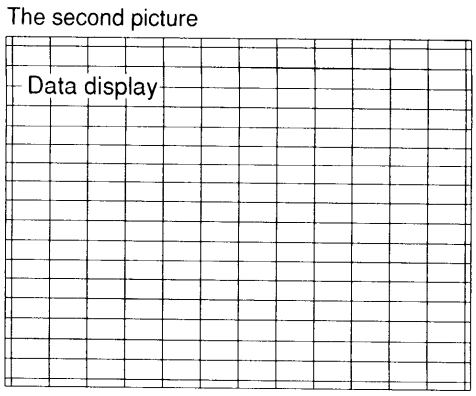

The first picture

Crosshatch pattern. Pattern colors are three color display. Cursor is blinking in red. When changed, condition is last memory state.

Cursor is ..... Data change mode in lighting,
Cursor shifting mode in blinking.

Display color shows the color that data change is possible.

The second picture

When entering from the first picture to the second picture, correcting wave of convergence is muted for one second. During this period, the changed data is transferred from RAM Q701 to E2PROM QH173, and saved.

The second picture is indicated with data on top left of the first picture, therefore, convergence cannot be adjusted by this picture.

Caution:

- Receive suitable signal for adjustment. Centering of green picture can be done in 50 Hz mode (PAL).
- Centering of 60 Hz mode (NTSC) can be adjusted by convergence adjustment. Besides, decide the center by cross pattern of static convergence in menu, and adjust convergence from center to circumference.

b) 60 Hz mode (NTSC) .... Correcting point: Horizontal 8 x Vertical 7 (Arrow marks denote correcting point)

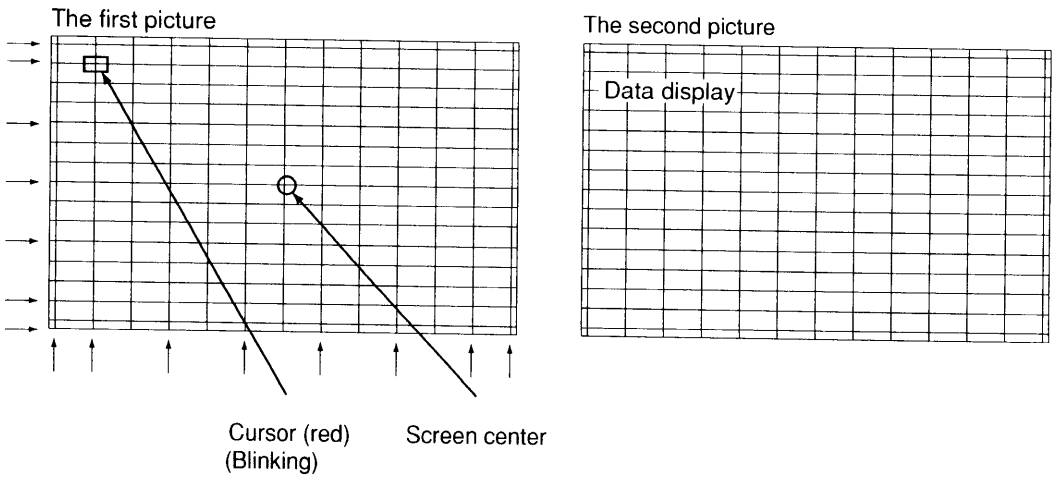

The first picture

Crosshatch pattern. Pattern colors are three color display. Cursor is blinking in red. When changed, condition is last memory state.

Cursor is ..... Data change mode in lighting,
Cursor shifting mode in blinking.

Display color shows the color that data change is possible.

The second picture

When entering from the first picture to the second picture, correcting wave of convergence is muted for one second.

During this period, the changed data is transferred from RAM Q701 to E²PROM QH173, and saved.
The second picture is indicated with data on top left of the first picture, therefore, convergence cannot be adjusted by this picture.

Caution:

- Receive suitable signal for adjustment. Decide the center by cross pattern of static convergence in menu, and adjust convergence from center to circumference.

4. ADJUSTING PICTURE DIMENSION (GREEN PICTURE)

1.50 Hz mode (PAL)

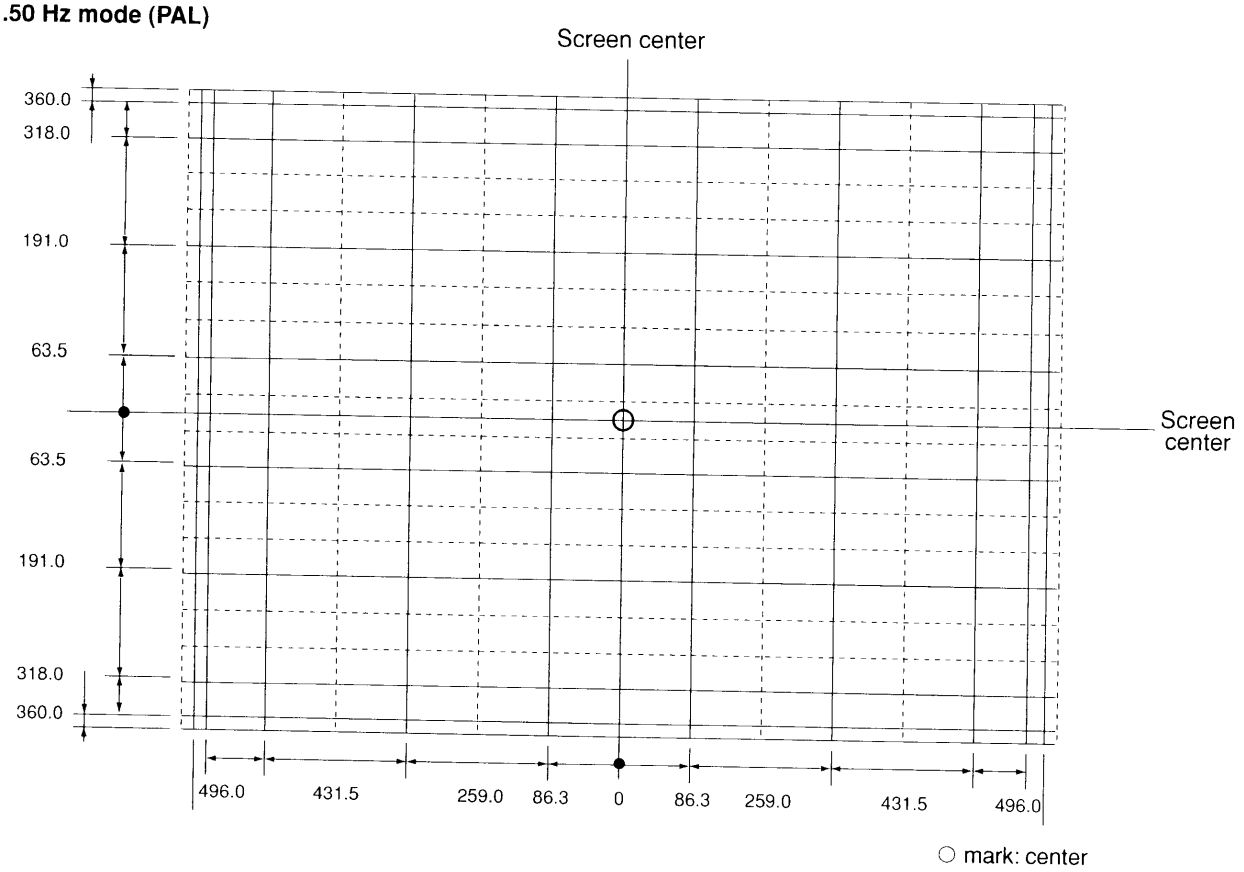

50 inches 4:3 Screen size: Horizontal 1014mm, Vertical 760mm

2. 60Hz mode (NTSC)

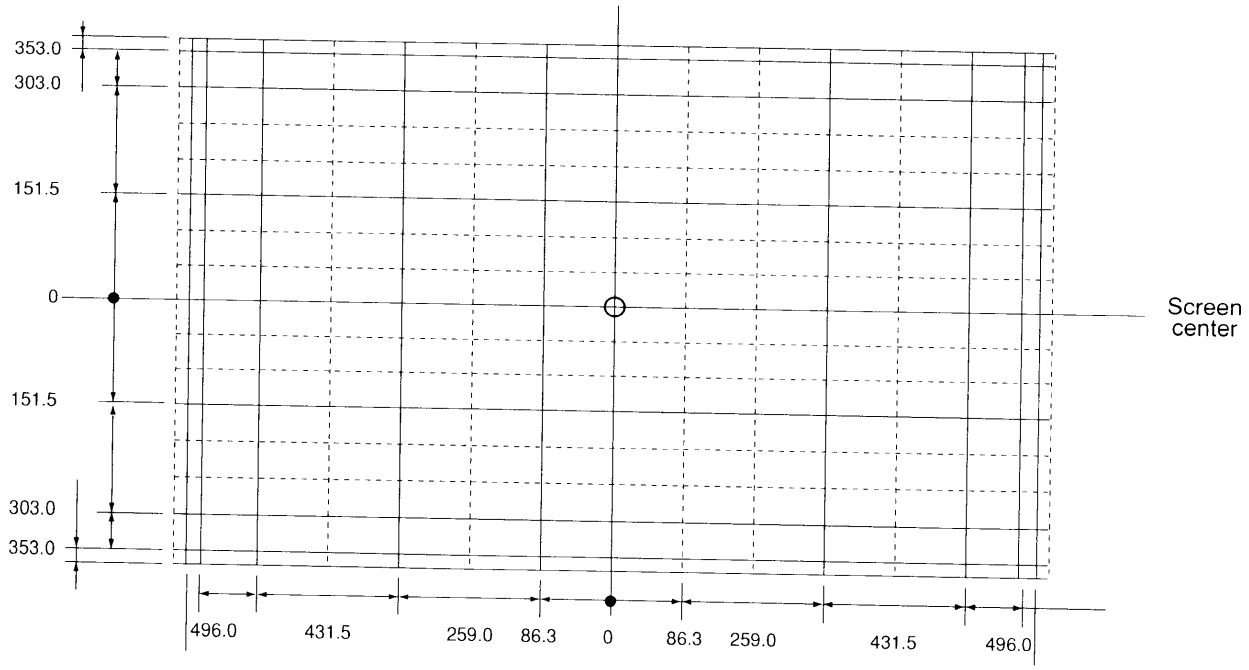

50 inches 4:3 Screen size: Horizontal 1014mm, Vertical 760mm

SCREEN AND MIRROR ALIGNMENTS

ASSEMBLING AND MOUNTING OF FRONT SCREEN

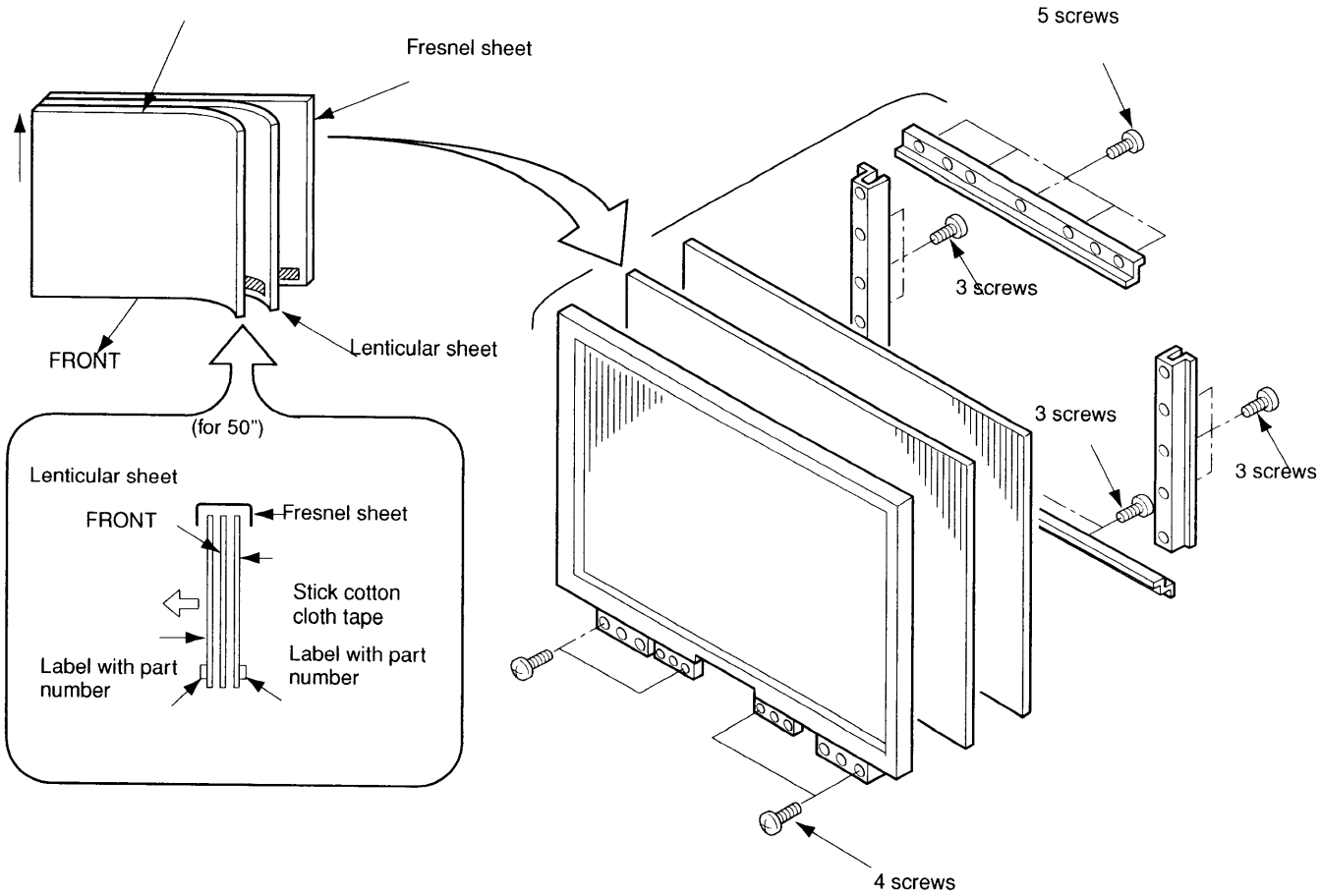

CLEANING OF LENS AND MIRROR

CAUTION : Do not hold the optical system parts (lens and mirror) with bare hand to avoid finger-prints on the surface of those parts.

HOW TO CLEAN LENS AND MIRROR

1. Be sure to remove sand dust with an air brush, etc.
2. When it is stained slightly, breathe upon it and wipe away with the specified cleaning cloth.
   For other stains than the above, wipe the stains away with the specified cloth into which a cleaning liquid has been soaked.

Cleaning liquid ..... **LENS LUSTER** (Manufactured by Edmund Scientific Co.), etc.

HOW TO CLEAN SCREEN

When cleaning the screen, use a soft cloth so as not to damage the screen.

1. Wipe the stain away with a diluted neutral detergent soaked cloth.
2. Wipe the detergent away with a water soaked cloth.
3. Wipe the screen with a dry cloth to remove moisture on the screen.

Note : Absolutely do not use alcohol, benzine, thinner, etc. for cleaning in order not to wipe away the black print on the surface.

CIRCUIT CHECKS

HIGH VOLTAGE CHECK

CAUTION: There is no HIGH VOLTAGE ADJUSTMENT on this chassis. Checking should be done following the steps below.

1. Connect an accurate high voltage meter to the anode of the picture tube.
2. Turn on the receiver. Set the BRIGHTNESS and CONTRAST to minimum (zero beam current).
3. High voltage must be measured below (B) kV.

   Refer to table-1 for high voltage (B).
   (See SETTING & ADJUSTING DATA on page 24)
4. Vary the BRIGHTNESS to both extremes to be sure the high voltage does not exceed the limit under any conditions.

CAUTION:
When the following parts fail, check the High Voltage after replacing.

Location No.	Name	Name
T461	Flyback Trans.	TFB3087AD
C440	Capacitor	2000pF, ±3%
C443	Capacitor	4700pF, ±3%
C444	Capacitor	8200pF, ±3%
C467	Capacitor	12000pF, ±3%
C468	Capacitor	12000pF, ±3%

ANODE VOLTAGE MEASURING METHOD

CAUTION: Take extra precaution when measuring this high voltage. High voltages are also present in surrounding circuit boards (CRT DRIVE assembly, DEFLECTION assembly, and POWER SUPPLY assembly).

1. Disconnect the FBT anode cable as outlined below. Measure high voltage at the point where the cable enters the FBT.
2. Holding the rubber cover firmly, turn it counterclockwise and check that the lock has been disengaged. (See Fig. b on page 8.)
3. Determine the extent of the rubber cover before disconnecting the cable.
4. Pull straight up the anode cable to disconnect.
5. When reconnecting the cable, proceed in the reverse order.
   After reconnecting, tug on the cable to check that it is secure.

SETTING & ADJUSTING DATA

【SAFETY INSTRUCTIONS】

		50"
HIGH VOLTAGE AT ZERO BEAM:	(A)	32.8 kV
MAX HIGH VOLTAGE:	(B)	34.4 kV
AC VOLTAGE	(C)	110~240 V

Table-1

【SERVICE MODE】

ADJUSTING ITEMS AND DATAS IN THE SERVICE MODE:

Item	Adjustment	Reference data
RCUT	R CUTOFF (B/W)	40H
GCUT	G CUTOFF (B/W)	40H
BCUT	B CUTOFF (B/W)	40H
RDRV	R DRIVE	40H
BDRV	B DRIVE	40H
CNTX	SUB CONTRAST MAX	7FH
BRTC	SUB BRIGHT CEN	80H
COLC	SUB COLOR CEN NTSC	50H
TNTC	SUB TINT CEN	20H
COLP	SUB COLOR CEN PAL	01H
COLS	SUB COLOR CEN SECAM	45H
COLD	SUB COLOR CEN DVD	50H
SCNT	SUB CONTRAST	0EH
SRY	SECAM R-Y	07H

Item	Adjustment	Reference data
SBY	SECAM B-Y	04H
HPOS	50Hz H-POSITION	3AH
VPOS	V-POSITION	60H
HIT	HEIGHT	4CH
VLIN	V-LINEARITY	11H
VSC	V-S CORRECTION	04H
VPS	V-SHIFT	1CH
VCP	V-COMPENSATION	0AH
WID	PICTURE WIDTH	22H
PARA	E-W PARABOLA	1CH
CNR	E-W CORNER	03H
TRAP	TRAPEZIUM	20H
HCP	H-COMPENSATION	00H
VFC	V-F CORRECTION	0FH

Table-2

【DESIGN MODE】

ADJUSTING ITEMS AND DATAS IN THE DESIGN MODE:

Item	Name of adjustment	Preset Data	50"	Remarks
RCUT				
OPT1	OPTION 1	48H	48H	
OPT0	OPTION 0	81H	81H	
OSD				
.				
.				
.				
.				
.				
RCUT				

Table-3

LOCATION OF CONTROLS (Representative: 50D9UXE)

Front

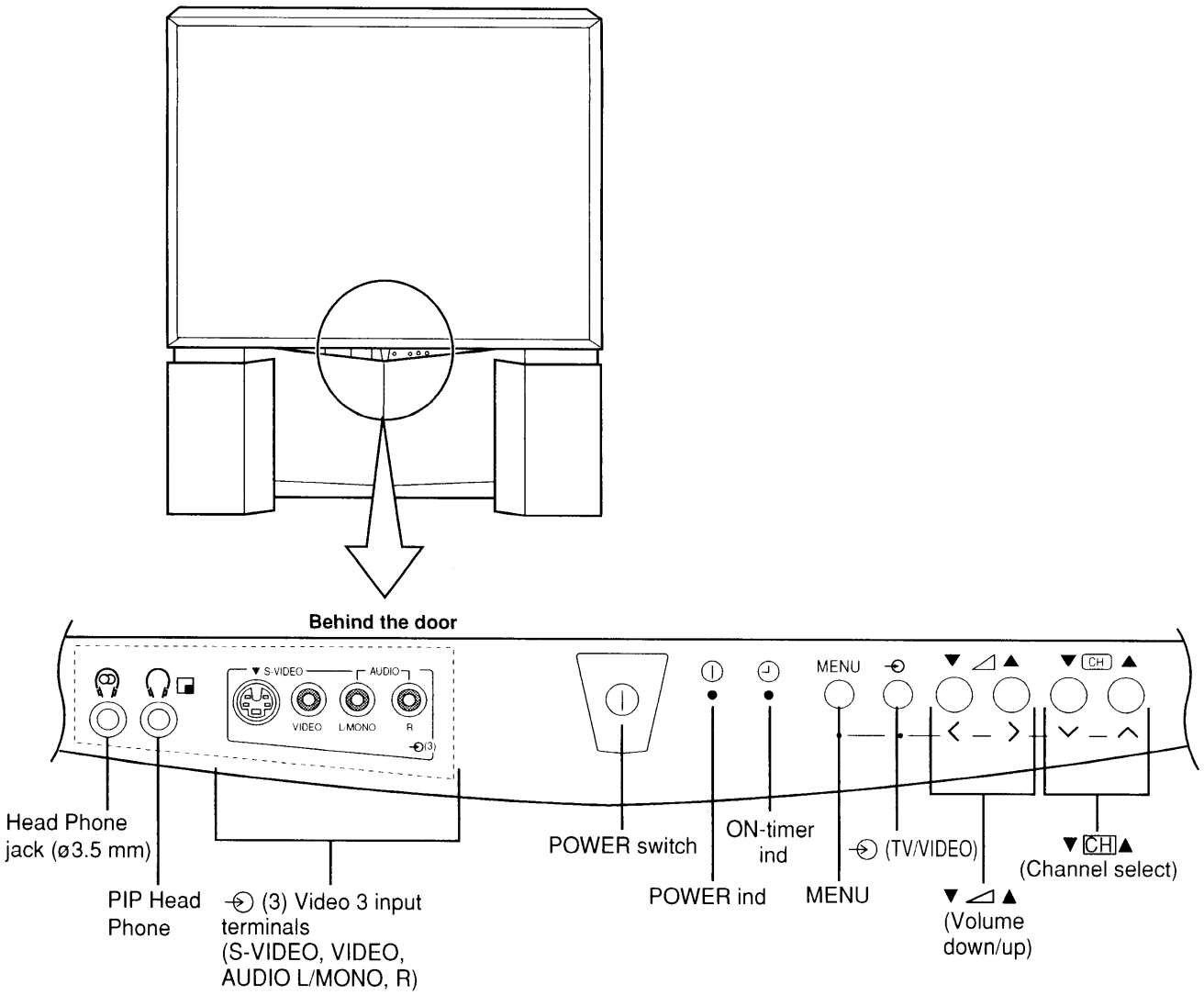

Back

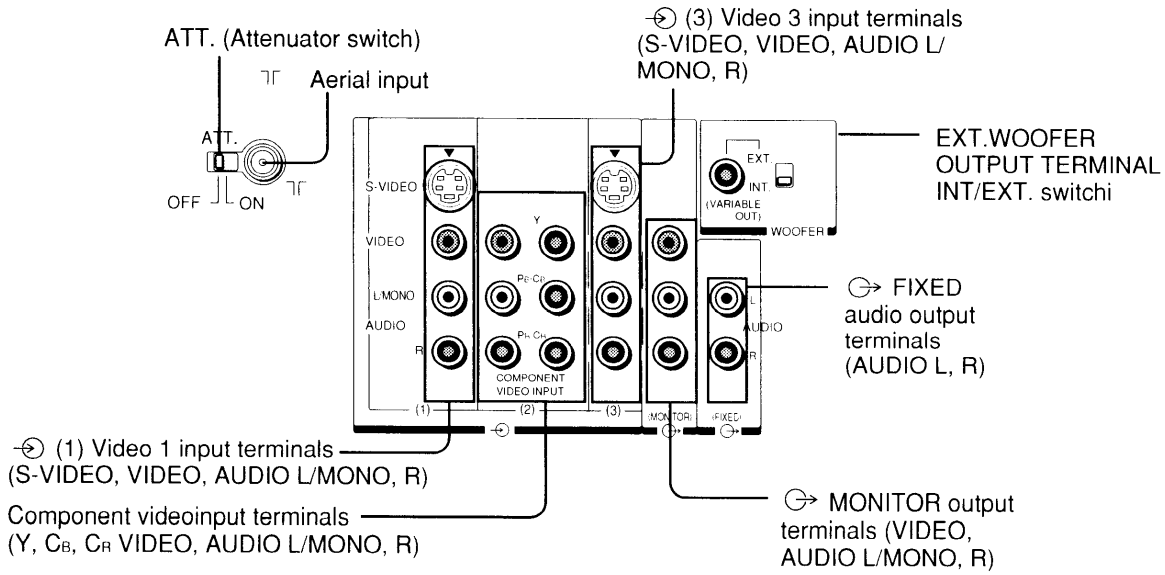

Remote Controller

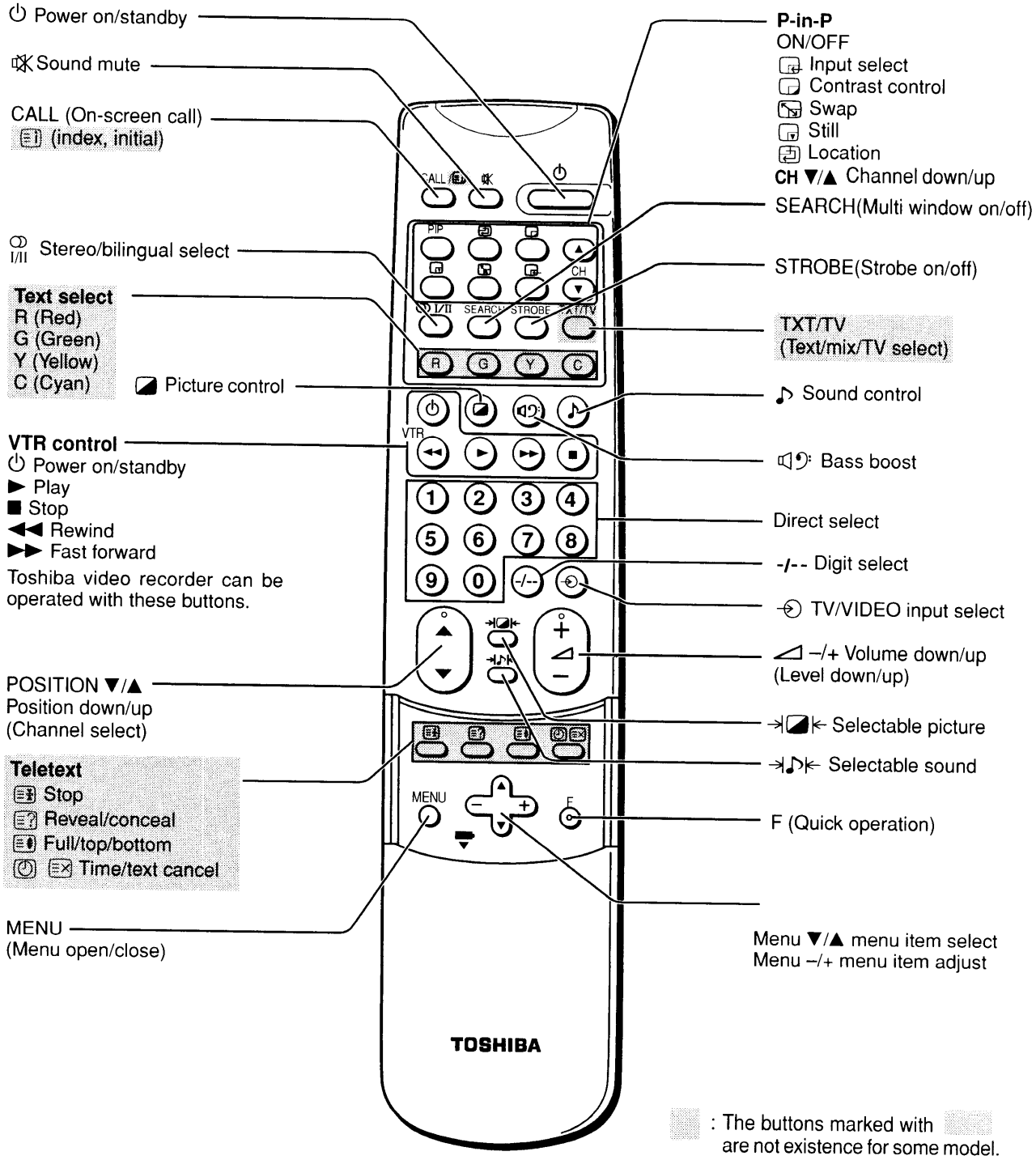

PROGRAMMING CHANNEL MEMORY

- First, use the ASM (Automatic Search Memory) function to preset all the active channels in your area automatically.
  Then, arrange the preset channels with the MANUAL SEARCH (SEARCH or >>>), MFT (Manual Fine Tuning) and SKIP functions so that you can tune into only desired channels.
- This section shows how to tune in channels using mainly the Remote Controller. You can also perform the system select, ASM, MANUAL SEARCH (SEARCH or >>>), MFT and SKIP operations using the buttons on the TV set.

To preset channels (ASM)

ASM (Automatic Search Memory)

1 Select the first position number you want the ASM to start presetting from with the **POSITION** ▼/▲ buttons or the direct select buttons.

2 Press the **MENU** button repeatedly to call up the SET UP menu on the screen.

3 Confirm that "COLOR" is set to "AUTO" and "SOUND" is set to proper system.
If not, press the **MENU** ▼/▲ (or position ▼/▲) buttons to move the cursor (▶) to "COLOR" or "SOUND" then press the **MENU** –/+ (or ◿ –/+) buttons to select the proper systems.

4 Press the **MENU** ▼/▲ (or position ▼/▲) buttons to move the cursor (▶) to "ASM".

5 Press the **MENU** + (or ◿ +) button to start the ASM. All active channels will be preset automatically.
When presetting is complete, the initial position number will reappear.

After presetting
Check the preset channels by pressing the **POSITION** ▼/▲ buttons.

- If the picture or sound of a certain channel is not good, re-tune the channel using the ASM, MANUAL SEARCH (SEARCH or >>>) or MFT function.
- If the colour of a certain channel is abnormal, the automatic colour system selection (AUTO) may have malfunctioned, or sound system selection is wrong. In such a case, select another colour and/or sound system.

MFT (Manual Fine Tuning)

The adjustments below are not necessary under normal conditions. However, in areas of inferior broadcast conditions where adjustment is necessary for a better picutre, adjust the tuning with the MFT (Manual Fine Tuning).

1 Select the channel you want to fine-tune with the **POSITION** ▼/▲ buttons or direct select buttons.

2 Press the **MENU** button repeatedly to call up the SET UP menu on the screen.

3 Press the **MENU** ▼/▲ (or position ▼/▲) buttons to move the cursor (▶) to "MFT".

4 Press the **MENU** –/+ (or ◿ –/+) buttons until the best possible picture and sound are obtained.
[–]DOWN or [+]UP is highlighted while tuning in.

- Use the MANUAL SEARCH (SEARCH or >>>) function if desired channels cannot be preset with the ASM or if you would like to preset channels to specific position numbers one by one.
- It is convenient to set the channel numbers to the same position numbers using MANUAL SEARCH (SEARCH or >>>) and SKIP functions.

To preset channels (Manual search) and skip unnecessary position numbers

Manual search (SEARCH or >>>)

1 Select a desired position number with the **POSITION** ▼/▲ or direct select buttons.

2 Press the **MENU** button repeatedly to call up the SET UP menu on the screen.

3 Press the **MENU** ▼/▲ (or position ▼/▲) buttons to move the cursor (▶) to " SEARCH or >>> ".

4 Press the **MENU** –/+ (or ◿ –/+)buttons to start searching. The **MENU** – (or ◿ –) button searches for lower-numbered channels; the **MENU** + (or ◿ +) button for higher-numbered channels.
Repeat this process until you can get the desired channel.

5 When the desired channel is shown, press the **MENU** ▼/▲ buttons (or position ▼/▲) to move the cursor (▶) to " –⊕ ".

6 Press the **MENU** + (or ◿ +) button to store the channel at the current position.

7 When you desire to store another channel at another position, move the cursor (▶) to "POSITION" with the **MENU** ▼/▲ (or position ▼/▲)buttons and select a desired position number with the **MENU** –/+ (or ◿ –/+)buttons. Then, press the **MENU** ▼/▲ (or position ▼/▲) buttons to move the cursor (▶) to " SEARCH or >>> " and repeat the steps 4 to 7. Or, repeat the steps 1 to 7 after the display disappears.

To skip a position number

After presetting the channels, you may skip unnecessary position numbers so that only the channels you want to watch are selected.

1 Select the position number to be skipped with the **POSITION** ▼/▲ buttons or direct select buttons.

2 Press the **MENU** button repeatedly to call up the SET UP menu on the screen.

3 Press the **MENU** ▼/▲ (or position ▼/▲) buttons to move the cursor (▶) to "SKIP".

4 Press the **MENU** –/+ (or ◿ –/+) buttons to select "SKIP ON".

5 Press the **CALL** button to turn off the SET UP menu display.
Select the position number to be skipped with the direct select buttons. The * mark appears to the left of the position number.
The position number will then be skipped when you select channels with the **POSITION** ▼/▲ buttons.

To restore a skipped position number

1 Select the position number you want to restore with the direct select buttons.

2 Press the **MENU** button to call up the SET UP menu display and press the **MENU** ▼/▲ (or position ▼/▲) buttons to move the cursor (▶) to "SKIP".

3 Press the **MENU** –/+ (or ◿ –/+) buttons to select "SKIP OFF".

*Please refer to owner's manual in detail.

CIRCUIT BLOCK DIAGRAM

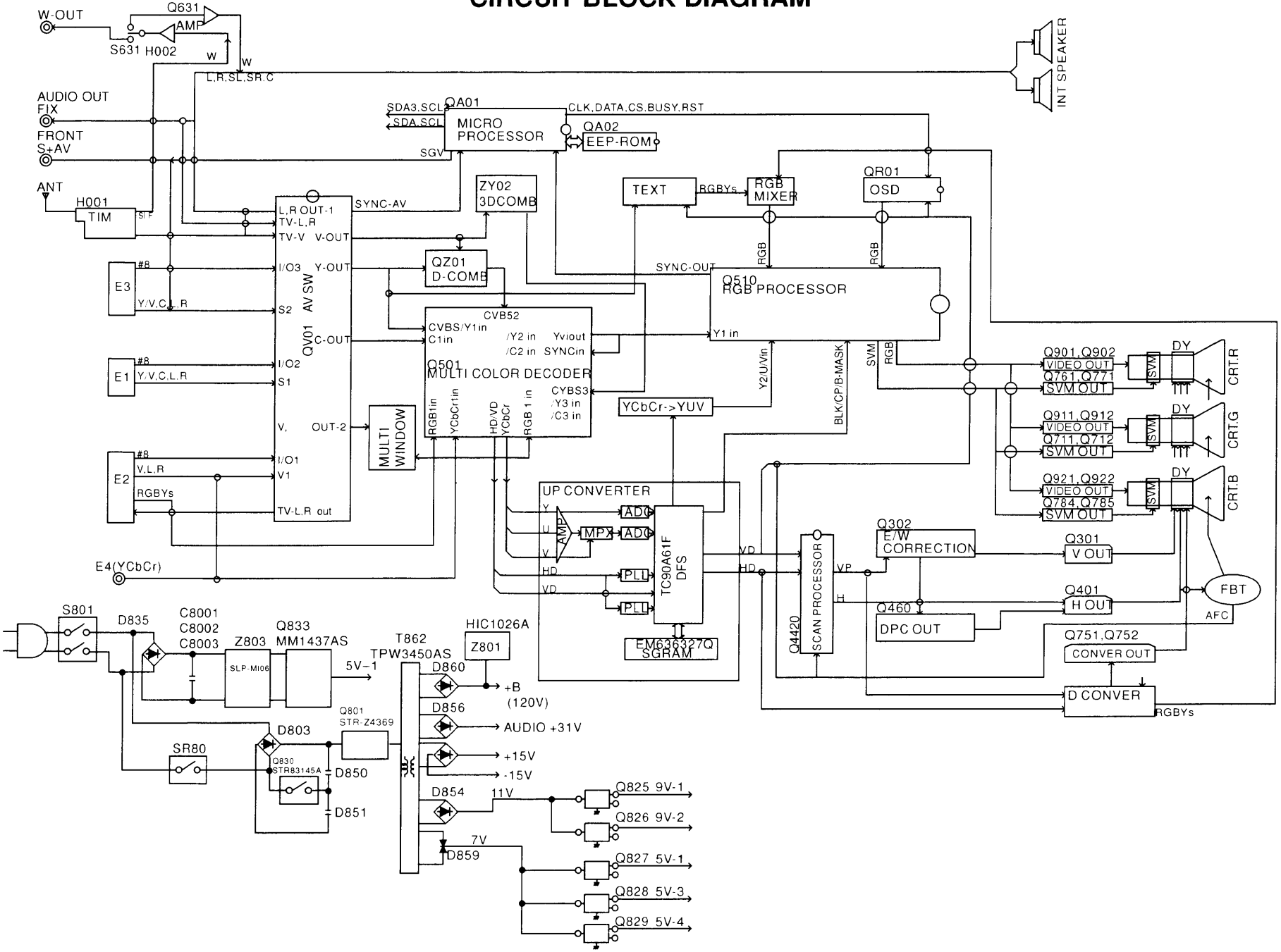

THIS PAGE IS
INTENTIONALLY LEFT
BLANK.

MECHANICAL DISASSEMBLY

1 Speaker Grille Removal

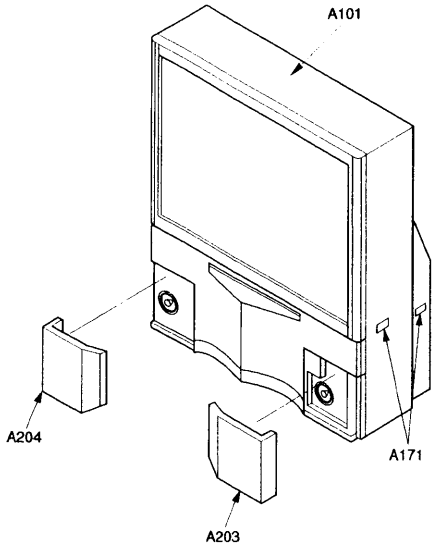

2 Control Panel Removal

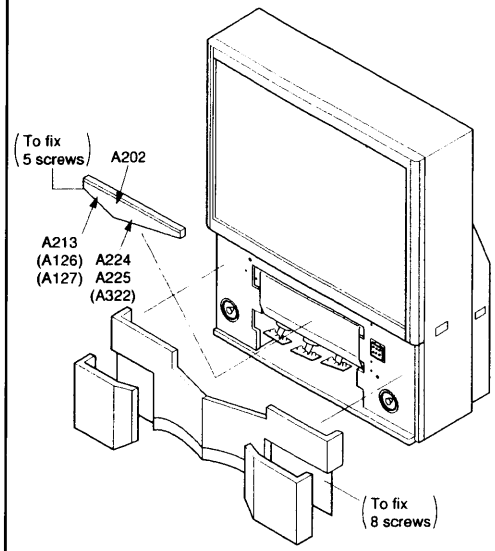

3 Front Mask Removal

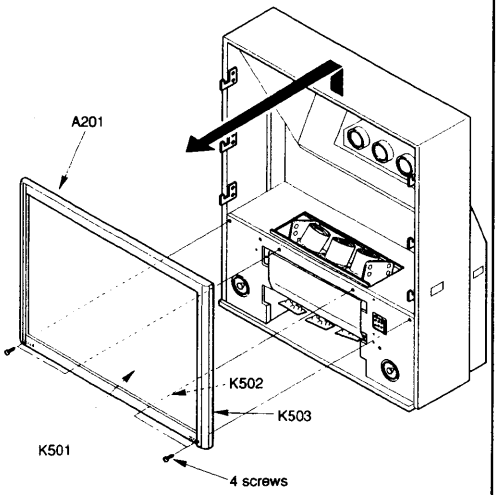

4 Mask Removal

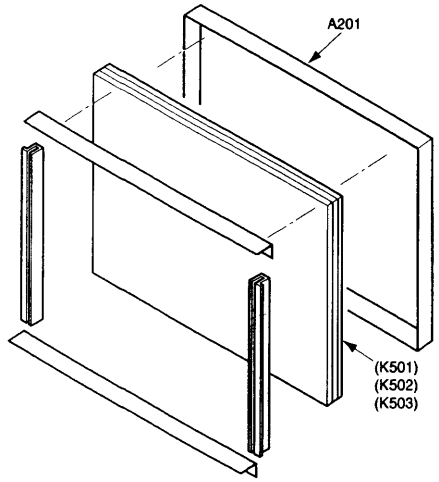

5 Shield Plate, Lens Removal

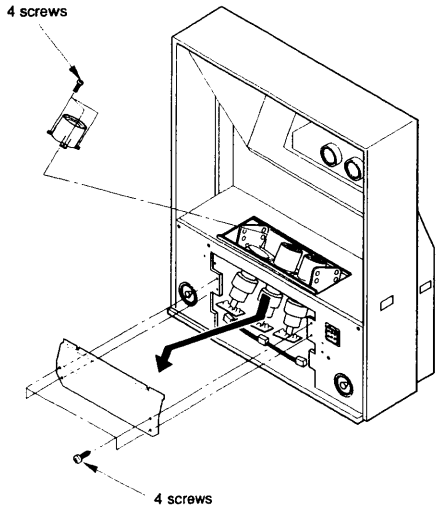

6 Mirror Removal

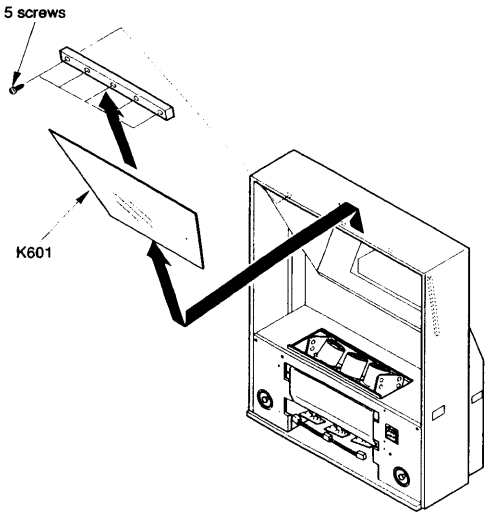

7 Back Board Removal

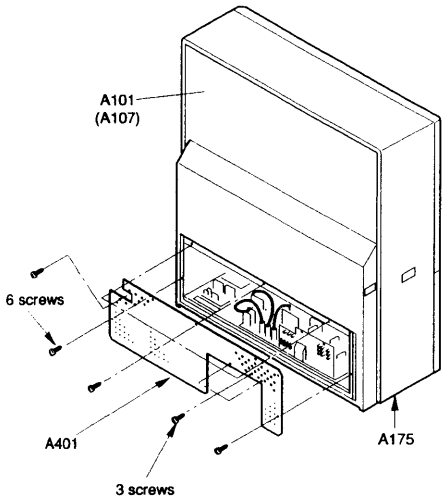

8 Light Box Removal

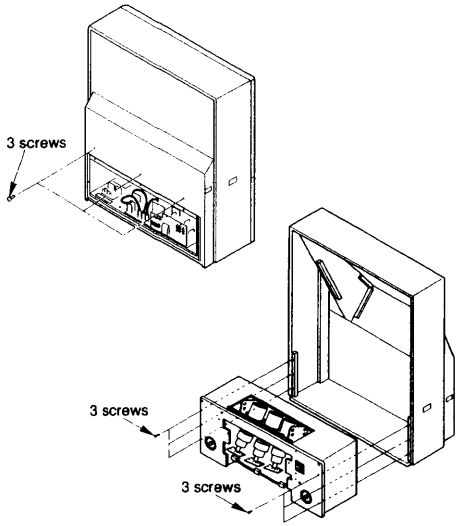

1 Speaker Grille Removal

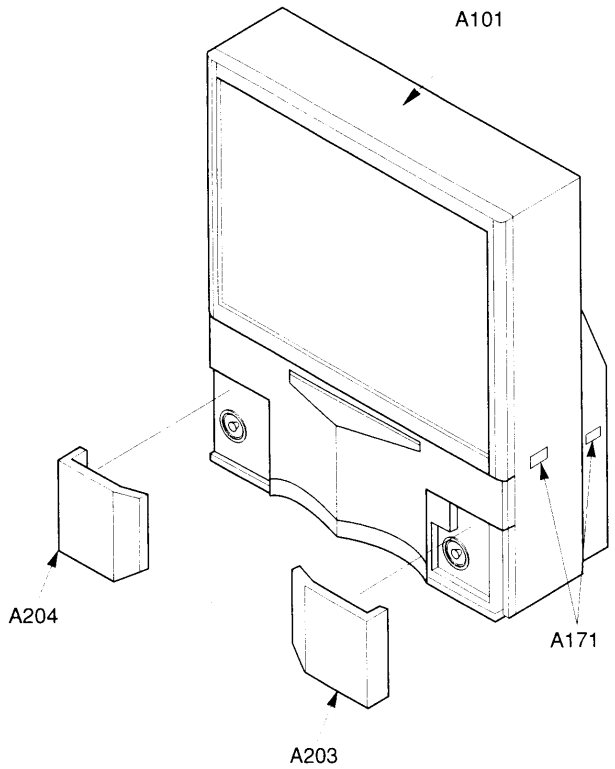

2 Control Panel Removal

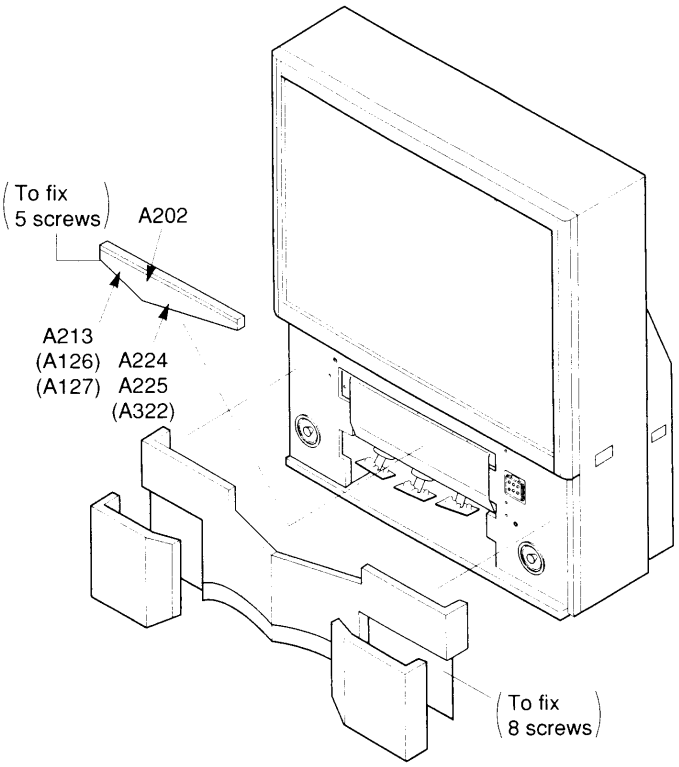

3

5 Shield Plate, Lens Removal

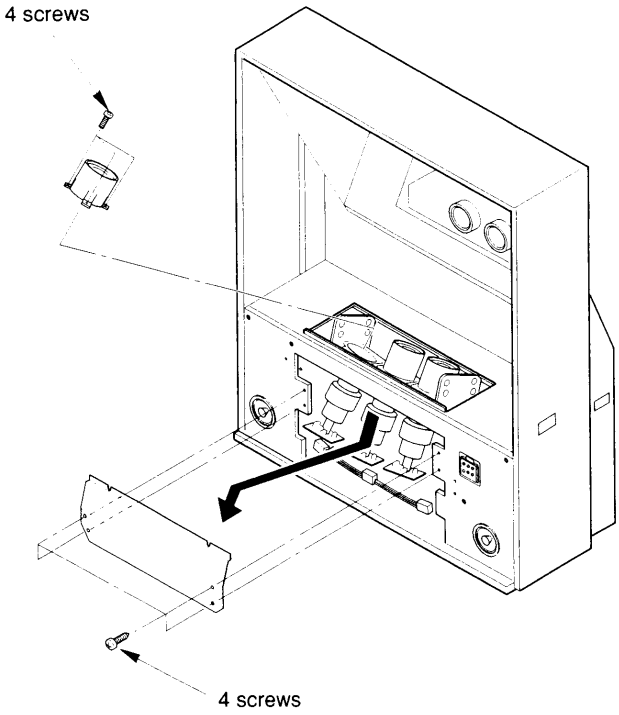

6 Mirror Removal

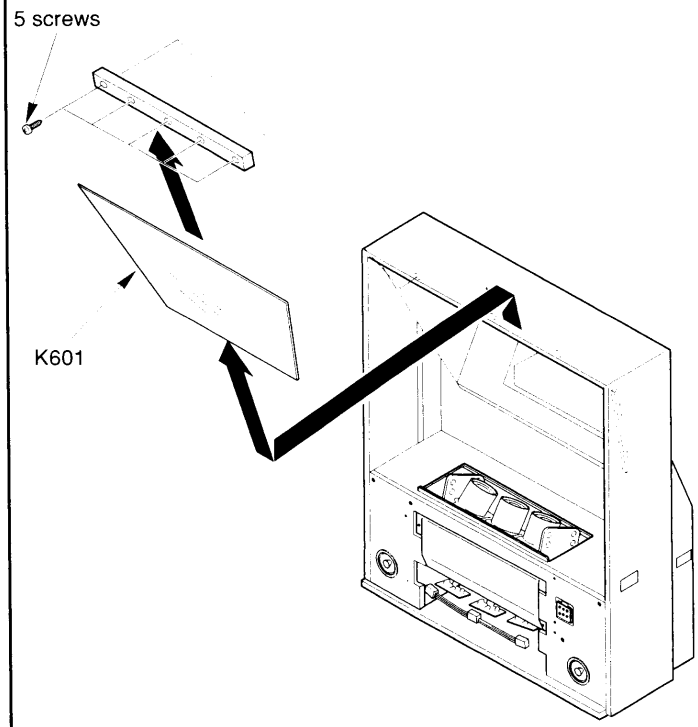

7

CHANICAL DISASSEMBLY

3 Front Mask Removal

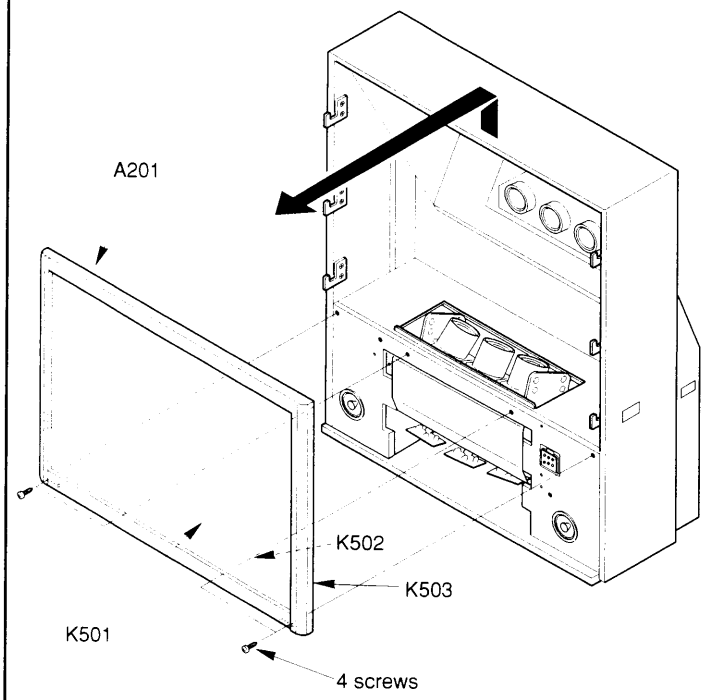

4 Mask Removal

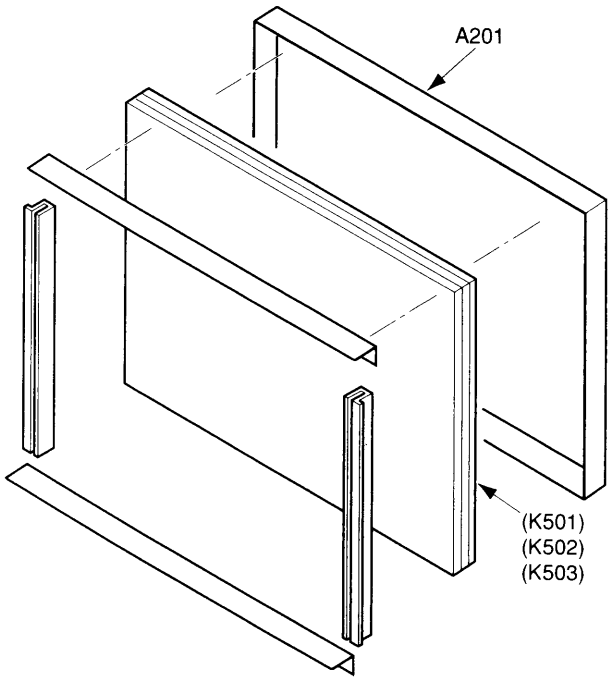

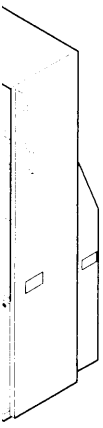

7 Back Board Removal

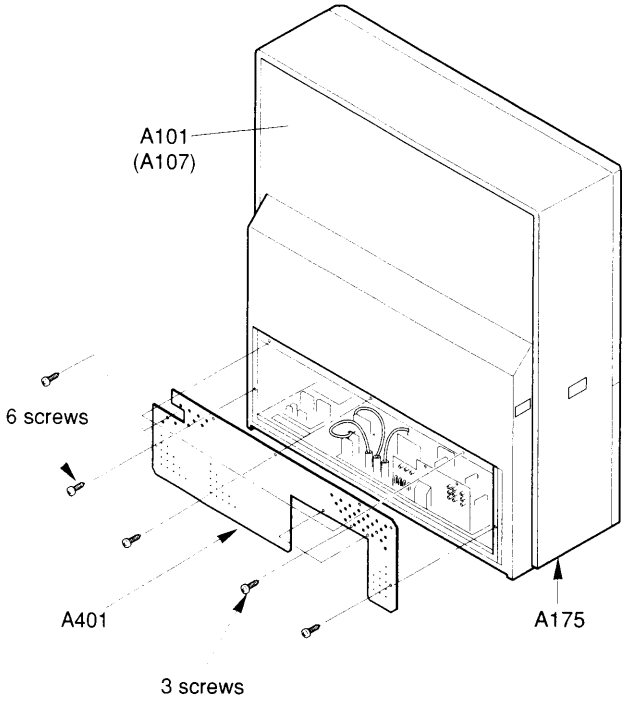

8 Light Box Removal

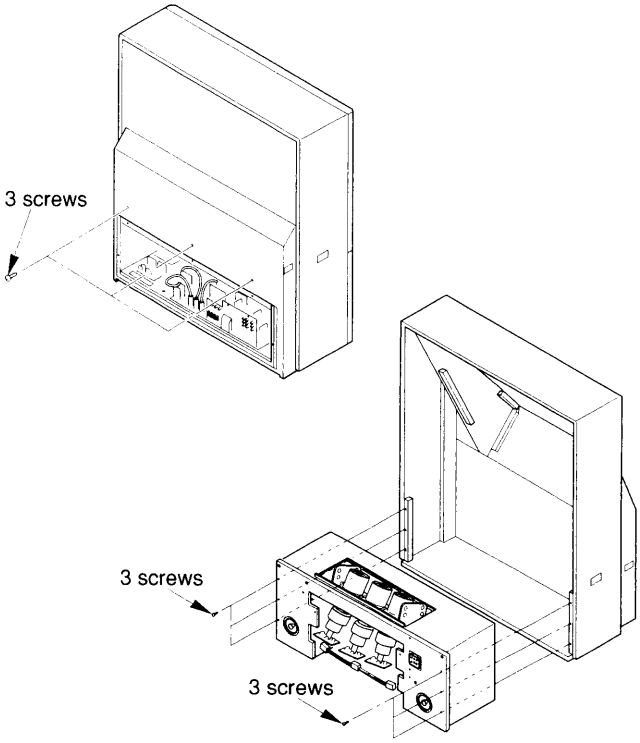

THIS PAGE IS
INTENTIONALLY LEFT
BLANK.

THIS PAGE IS INTENTIONALLY LEFT BLANK.

GE IS
LLY LEFT
NK.

CHASSIS AND CABINET REPLACEMENT PARTS LIST

WARNING: BEFORE SERVICING THIS CHASSIS, READ THE "X-RAY RADIATION PRECAUTION", "SAFETY PRECAUTION" AND "PRODUCT SAFETY NOTICE" ON PAGE 3 OF THIS MANUAL.

CAUTION: The international hazard symbols "⚠" in the schematic diagram and the parts list designate components which have special characteristics important for safety and should be replaced only with types identical to those in the original circuit or specified in the parts list. The mounting position of replacements is to be identical with originals. Before replacing any of these components, read carefully the PRODUCT SAFETY NOTICE. Do not degrade the safety of the receiver through improper servicing.

NOTICE:

- *The part number must be used when ordering parts, in order to assist in processing, be sure to include the Model number and Description.*
- *The PC board assembly with ∗ mark is no longer available after the end of the production.*

ABBREVIATIONS:

Capacitors	CD	:	Ceramic Disk	PF	:	Plastic Film	EL	: Electrolytic
Resistors	CF	:	Carbon Film	CC	:	Carbon Composition	MF	: Metal Film
	OMF	:	Oxide Metal Film	VR	:	Variable Resistor	FR	: Fusible Resistor

(All CD and PF capacitors are ±5%, 50V and all resistors, ±5%, 1/6W unless otherwise noted.)

Models :50D9UXE, 50D9UXH, 50D9UXA

Location No.	Part No.	Description
CAPACITORS		
C105	24212102	CD, 1000pF, ±10%
C106	24797100	EL, 10μF, ±20%, 50V
C107	24763221	EL, 220μF, ±20%, 16V
C110	24232103	CD, 0.01μF, +80%, -20%
C111	24794101	EL, 100μF, ±20%, 16V
C115	24232103	CD, 0.01μF, +80%, -20%
C117	24232103	CD, 0.01μF, +80%, -20%
C119	24474102	CD, 1000pF, ±10%
C190	24232103	CD, 0.01μF, +80%, -20%
C199	24666221	EL, 220μF, ±20%, 16V
C201	24206228	EL, 0.22μF, ±20%, 50V
C202	24232103	CD, 0.01μF, +80%, -20%
C203	24591104	PF, 0.1μF
C204	24797010	EL, 1μF, ±20%, 50V
C205	24797229	EL, 2.2μF, ±20%, 50V
C206	24797220	EL, 22μF, ±20%, 50V
C212	24794100	EL, 10μF, ±20%, 16V
C214	24538334	PF, 0.33μF
C215	24474101	CD, 100pF, ±10%
C219	24473100	CD, 10pF
C220	24794101	EL, 100μF, ±20%, 16V
C221	24473100	CD, 10pF
C222	24473100	CD, 10pF
C263	24794470	EL, 47μF, ±20%, 16V
C264	24794100	EL, 10μF, ±20%, 16V
C265	24794470	EL, 47μF, ±20%, 16V
C266	24794100	EL, 10μF, ±20%, 16V
C301	24567683	PF, 0.068μF
C302	24567224	PF, 0.22μF
C303	24567103	PF, 0.01μF
C304	24567104	PF, 0.1μF
C305	24567103	PF, 0.01μF
C306	24591102	PF, 1000pF
C307	24567105	PF, 1μF
C308	24591203	PF, 0.02μF
C309	24591102	PF, 1000pF
C310	24667101	EL, 100μF, ±20%, 25V
C311	24567103	PF, 0.01μF
C312	24591102	PF, 1000pF
C313	24666101	EL, 100μF, ±20%, 16V
C314	24567104	PF, 0.1μF
C315	24666102	EL, 1000μF, ±20%, 16V
C315	24797229	EL, 2.2μF, ±20%, 50V
C316	24666101	EL, 100μF, ±20%, 16V
C317	24591222	PF, 2200pF
C318	24591182	PF, 1800pF
C319	24667101	EL, 100μF, ±20%, 25V
C320	24669101	EL, 100μF, ±20%, 50V
C321	24669101	EL, 100μF, ±20%, 50V
C322	24567393	PF, 0.039μF
C323	24567563	PF, 0.056μF
C324	24669101	EL, 100μF, ±20%, 50V
C325	24082057	PF, 0.22μF, 100V
C326	24567224	PF, 0.22μF
C327	24666101	EL, 100μF, ±20%, 16V
C328	24082260	PF, 4700pF, 100V
C329	24669100	EL, 10μF, ±20%, 50V
C330	24085946	EL, 10μF, ±20%, 16V, Non-Polar
C332	24669221	EL, 220μF, ±20%, 50V
C333	24693473	PF, 0.047μF, 100V
C334	24212471	CD, 470pF, ±10%
C335	24567104	PF, 0.1μF
C350	24567474	PF, 0.47μF
C351	24567104	PF, 0.1μF
C370	24669229	EL, 2.2μF, ±20%, 50V
C371	24591124	PF, 0.12μF
C372	24212101	CD, 100pF, ±10%
C380	24794330	EL, 33μF, ±20%, 16V
C401	24214332	CD, 3300pF, ±10%, 500V
C402	24214391	CD, 390pF, ±10%, 500V
C403	24232103	CD, 0.01μF, +80%, -20%
C404	24797229	EL, 2.2μF, ±20%, 50V
C405	24567124	PF, 0.12μF
C412	24095800	PF, 0.082μF, 400V
C415	24092478	CD, 470pF, ±10%, 2kV
C416	24676220	EL, 22μF, ±20%, 100V
C417	24095716	PF, 1.5μF, ±10%, 250V
C423	24095786	PF, 0.33μF, 400V
C424	24763101	EL, 100μF, ±20%, 16V
C425	24095787	PF, 0.3μF, 400V

Location No.	Part No.	Description
C426	24082608	PF, 4700pF, ±3%, 1800V
C430	24232103	CD, 0.01μF, +80%, -20%
C431	24763102	EL, 1000μF, ±20%, 16V
C432	24567333	PF, 0.033μF
C440	24082937	PF, 2000pF, ±3%, 1500V
C443	24082946	PF, 4700pF, ±3%, 1500V
C444	24082961	PF, 8200pF, ±3%, 1500V
C445	24828473	PF, 0.047μF, 200V
C446	24679330	EL, 33μF, ±20%, 250V
C448	24640908	EL, 33μF, ±20%, 160V
C449	24214221	CD, 220pF, ±10%, 500V
C460	24679330	EL, 33μF, ±20%, 250V
C464	24095900	PF, 3.3μF, ±10%, 100V
C465	24567103	PF, 0.01μF
C466	24591332	PF, 3300pF
C469	24567474	PF, 0.47μF
C470	24095900	PF, 3.3μF, ±10%, 100V
C471	24669479	EL, 4.7μF, ±20%, 50V
C478	24567474	PF, 0.47μF
C481	24666101	EL, 100μF, ±20%, 16V
C482	24591223	PF, 0.022μF
C483	24591472	PF, 4700pF
C484	24591471	PF, 470pF
C502	24232103	CD, 0.01μF, +80%, -20%
C503	24794221	EL, 220μF, ±20%, 16V
C508	24797010	EL, 1μF, ±20%, 50V
C509	24794101	EL, 100μF, ±20%, 16V
C510	24794101	EL, 100μF, ±20%, 16V
C511	24232103	CD, 0.01μF, +80%, -20%
C513	24232103	CD, 0.01μF, +80%, -20%
C514	24567104	PF, 0.1μF
C515	24567104	PF, 0.1μF
C520	24212102	CD, 1000pF, ±10%
C521	24212102	CD, 1000pF, ±10%
C522	24797010	EL, 1μF, ±20%, 50V
C523	24477104	CD, 0.01μF, +80%, -20%
C524	24477104	CD, 0.01μF, +80%, -20%
C525	24477104	CD, 0.01μF, +80%, -20%
C526	24474101	CD, 100pF, ±10%
C541	24567104	PF, 0.1μF
C542	24567104	PF, 0.1μF
C543	24797470	EL, 47μF, ±20%, 50V
C544	24232103	CD, 0.01μF, +80%, -20%
C545	24797470	EL, 47μF, ±20%, 50V
C546	24232103	CD, 0.01μF, +80%, -20%
C547	24567104	PF, 0.1μF
C548	24567104	PF, 0.1μF
C549	24567104	PF, 0.1μF
C550	24797479	EL, 4.7μF, ±20%, 50V
C551	24567104	PF, 0.1μF
C552	24591104	PF, 0.1μF
C553	24567104	PF, 0.1μF
C554	24797470	EL, 47μF, ±20%, 50V
C555	24232103	CD, 0.01μF, +80%, -20%
C560	24353100	CD, 10pF, ±0.25pF, CH
C561	24232103	CD, 0.01μF, +80%, -20%
C562	24797478	EL, 0.47μF, ±20%, 50V
C563	24567104	PF, 0.1μF
C564	24567104	PF, 0.1μF
C565	24567223	PF, 0.022μF
C566	24797229	EL, 2.2μF, ±20%, 50V
C567	24232103	CD, 0.01μF, +80%, -20%
C568	24232103	CD, 0.01μF, +80%, -20%
C569	24232103	CD, 0.01μF, +80%, -20%

Location No.	Part No.	Description
C580	24567104	PF, 0.1μF
C601	24591682	PF, 6800pF
C602	24591682	PF, 6800pF
C609	24794471	EL, 470μF, ±20%, 16V
C610	24591102	PF, 1000pF
C611	24591102	PF, 1000pF
C612	24797479	EL, 4.7μF, ±20%, 50V
C613	24797479	EL, 4.7μF, ±20%, 50V
C614	24669102	EL, 1000μF, ±20%, 50V
C615	24669102	EL, 1000μF, ±20%, 50V
C616	24591124	PF, 0.12μF
C617	24591124	PF, 0.12μF
C618	24797478	EL, 0.47μF, ±20%, 50V
C619	24793220	EL, 22μF, ±20%, 10V
C620	24795470	EL, 47μF, ±20%, 25V
C621	24795470	EL, 47μF, ±20%, 25V
C622	24795470	EL, 47μF, ±20%, 25V
C623	24797479	EL, 4.7μF, ±20%, 50V
C624	24591103	PF, 0.01μF
C625	24797102	EL, 1000μF, ±20%, 50V
C627	24794100	EL, 10μF, ±20%, 16V
C665	24797010	EL, 1μF, ±20%, 50V
C666	24797010	EL, 1μF, ±20%, 50V
C704	24232103	CD, 0.01μF, +80%, -20%
C705	24206479	EL, 4.7μF, ±20%, 50V
C707	24797470	EL, 47μF, ±20%, 50V
C712	24797470	EL, 47μF, ±20%, 50V
C713	24790470	EL, 47μF, ±20%, 160V
C715	24214472	CD, 4700pF, ±10%, 500V
C717	24214472	CD, 4700pF, ±10%, 500V
C718	24666470	EL, 47μF, ±20%, 16V
C719	24435560	CD, 56pF, 500V
C720	24790220	EL, 22μF, ±20%, 160V
C721	24666470	EL, 47μF, ±20%, 16V
C722	24436820	CD, 82pF
C726	24212102	CD, 1000pF, ±10%
C760	24797470	EL, 47μF, ±20%, 50V
C761	24212102	CD, 1000pF, ±10%
C762	24797470	EL, 47μF, ±20%, 50V
C765	24214472	CD, 4700pF, ±10%, 500V
C766	24214472	CD, 4700pF, ±10%, 500V
C767	24790470	EL, 47μF, ±20%, 160V
C768	24666470	EL, 47μF, ±20%, 16V
C769	24666470	EL, 47μF, ±20%, 16V
C770	24435560	CD, 56pF, 500V
C771	24790220	EL, 22μF, ±20%, 160V
C780	24797470	EL, 47μF, ±20%, 50V
C781	24212102	CD, 1000pF, ±10%
C782	24797470	EL, 47μF, ±20%, 50V
C784	24214472	CD, 4700pF, ±10%, 500V
C786	24214472	CD, 4700pF, ±10%, 500V
C787	24790470	EL, 47μF, ±20%, 160V
C788	24666470	EL, 47μF, ±20%, 16V
C789	24666470	EL, 47μF, ±20%, 16V
C790	24435560	CD, 56pF, 500V
C791	24790220	EL, 22μF, ±20%, 160V
C792	24666100	EL, 10μF, ±20%, 16V
⚠C801	24503002	PF, 0.22μF, ±20%, AC275V
⚠C802	24092557	CD, 220pF, ±20%, AC250V
⚠C803	24092557	CD, 220pF, ±20%, AC250V
⚠C804	24092570	CD, 3300pF, ±20%, AC250V
⚠C805	24503002	PF, 0.22μF, ±20%, AC275V
⚠C806	24503002	PF, 0.22μF, ±20%, AC275V
⚠C807	24092557	CD, 220pF, ±20%, AC250V

Location No.	Part No.	Description
⚠C808	24503002	PF, 0.22μF, ±20%, AC275V
C811	24678478	EL, 0.47μF, ±20%, 200V
C814	24678229	EL, 2.2μF, ±20%, 200V
C815	24567474	PF, 0.47μF
C816	24617817	EL, 22μF, ±20%, 50V
C817	24567224	PF, 0.22μF
C819	24214102	CD, 1000pF, ±10%, 500V
C820	24567224	PF, 0.22μF
C821	24092480	CD, 680pF, ±10%, 2kV
C822	24092481	CD, 820pF, ±10%, 2kV
⚠C823	24092478	CD, 470pF, ±10%, 2kV
C825	24591472	PF, 4700pF
C826	24092474	CD, 220pF, ±10%, 2kV
C828	24820683	PF, 0.068μF, 630V
C829	24617820	EL, 100μF, ±20%, 50V
C830	24567105	PF, 1μF
C831	24669220	EL, 22μF, ±20%, 50V
C832	24503001	PF, 0.1μF
C833	24073101	EL, 47μF, ±20%, 400V
C836	24667101	EL, 100μF, ±20%, 25V
C837	24666331	EL, 330μF, ±20%, 16V
C839	24669220	EL, 22μF, ±20%, 50V
C840	24591104	PF, 0.1μF
C841	24669220	EL, 22μF, ±20%, 50V
C842	24591104	PF, 0.1μF
C843	24669010	EL, 1μF, ±20%, 50V
C844	24092281	CD, 4700pF, ±20%, AC250V
C845	24092281	CD, 4700pF, ±20%, AC250V
C846	24073098	EL, 4.7μF, ±20%, 450V
C847	24669479	EL, 4.7μF, ±20%, 50V
C848	24567473	PF, 0.047μF
C849	24082081	PF, 0.033μF, 630V
C850	24086068	EL, 820μF, ±20%, 200V
C851	24086068	EL, 820μF, ±20%, 200V
C852	24666100	EL, 10μF, ±20%, 16V
C853	24591104	PF, 0.1μF
C858	24214471	CD, 470pF, ±10%, 500V
C859	24214471	CD, 470pF, ±10%, 500V
C860	24668222	EL, 2200μF, ±20%, 35V
C861	24617810	EL, 4700μF, ±20%, 35V
C863	24617810	EL, 4700μF, ±20%, 35V
C864	24677470	EL, 47μF, ±20%, 160V
C865	24667471	EL, 470μF, ±20%, 25V
C866	24667471	EL, 470μF, ±20%, 25V
C869	24669222	EL, 2200μF, ±20%, 50V
C874	24212102	CD, 1000pF, ±10%
C875	24667472	EL, 4700μF, ±20%, 25V
C876	24086916	EL, 330μF, ±20%, 160V
C879	24092475	CD, 270pF, ±10%, 2kV
C880	24092475	CD, 270pF, ±10%, 2kV
C882	24617817	EL, 22μF, ±20%, 50V
C883	24082229	PF, 0.1μF, ±10%, 250V
C884	24617816	EL, 10μF, ±20%, 50V
C885	24617813	EL, 2.2μF, ±20%, 50V
C886	24797100	EL, 10μF, ±20%, 50V
C887	24794470	EL, 47μF, ±20%, 16V
C889	24669010	EL, 1μF, ±20%, 50V
C890	24797100	EL, 10μF, ±20%, 50V
C891	24794470	EL, 47μF, ±20%, 16V
C892	24669229	EL, 2.2μF, ±20%, 50V
C893	24797100	EL, 10μF, ±20%, 50V
C894	24794470	EL, 47μF, ±20%, 16V
C895	24797100	EL, 10μF, ±20%, 50V
C896	24794470	EL, 47μF, ±20%, 16V

Location No.	Part No.	Description
C897	24797100	EL, 10μF, ±20%, 50V
C898	24794470	EL, 47μF, ±20%, 16V
C901	24211102	CD, 1000pF, ±10%, 2kV
C902	24794100	EL, 10μF, ±20%, 16V
C903	24232103	CD, 0.01μF, +80%, -20%
C904	24436391	CD, 390pF
C907	24214101	CD, 100pF, ±10%, 500V
C908	24436390	CD, 39pF
C909	24794470	EL, 47μF, ±20%, 16V
C911	24211102	CD, 1000pF, ±10%, 2kV
C912	24794100	EL, 10μF, ±20%, 16V
C913	24232103	CD, 0.01μF, +80%, -20%
C914	24436471	CD, 470pF
C915	24679330	EL, 33μF, ±20%, 250V
C917	24214101	CD, 100pF, ±10%, 500V
C918	24567104	PF, 0.1μF
C919	24794470	EL, 47μF, ±20%, 16V
C921	24211102	CD, 1000pF, ±10%, 2kV
C922	24794100	EL, 10μF, ±20%, 16V
C923	24436391	CD, 390pF
C924	24232103	CD, 0.01μF, +80%, -20%
C926	24214101	CD, 100pF, ±10%, 500V
C927	24567104	PF, 0.1μF
C928	24794100	EL, 10μF, ±20%, 16V
C961	24794100	EL, 10μF, ±20%, 16V
C962	24794100	EL, 10μF, ±20%, 16V
C963	24567104	PF, 0.1μF
C964	24567104	PF, 0.1μF
C3051	24666330	EL, 33μF, ±20%, 16V
C3150	24666102	EL, 1000μF, ±20%, 16V
C4402	24669010	EL, 1μF, ±20%, 50V
C4405	24591103	PF, 0.01μF
C4408	24591103	PF, 0.01μF
C4418	24591103	PF, 0.01μF
C4425	24669010	EL, 1μF, ±20%, 50V
C4426	24666101	EL, 100μF, ±20%, 16V
C4430	24669479	EL, 4.7μF, ±20%, 50V
C4447	24591103	PF, 0.01μF
C7704	24667101	EL, 100μF, ±20%, 25V
C7705	24567474	PF, 0.47μF
C7706	24567474	PF, 0.47μF
C7707	24667101	EL, 100μF, ±20%, 25V
C7708	24436150	CD, 15pF
C7709	24436150	CD, 15pF
C7710	24436150	CD, 15pF
C7711	24436150	CD, 15pF
C7712	24436150	CD, 15pF
C7713	24436150	CD, 15pF
C7714	24436150	CD, 15pF
C7715	24436150	CD, 15pF
C7716	24436150	CD, 15pF
C7717	24436150	CD, 15pF
C7718	24436150	CD, 15pF
C7719	24436150	CD, 15pF
C7721	24212102	CD, 1000pF, ±10%
C7722	24436331	CD, 330pF
C7724	24667331	EL, 330μF, ±20%, 25V
C7725	24667331	EL, 330μF, ±20%, 25V
C7726	24212102	CD, 1000pF, ±10%
C7727	24436331	CD, 330pF
C7729	24212102	CD, 1000pF, ±10%
C7730	24436331	CD, 330pF
C7732	24436331	CD, 330pF
C7733	24436331	CD, 330pF

Location No.	Part No.	Description
C7735	24667331	EL, 330μF, ±20%, 25V
C7736	24667331	EL, 330μF, ±20%, 25V
C7737	24212102	CD, 1000pF, ±10%
C7738	24436331	CD, 330pF
C7740	24436331	CD, 330pF
C7741	24436331	CD, 330pF
C7751	24667101	EL, 100μF, ±20%, 25V
C7752	24567474	PF, 0.47μF
C7753	24567474	PF, 0.47μF
C7754	24667101	EL, 100μF, ±20%, 25V
C7760	24667470	EL, 47μF, ±20%, 25V
C7761	24667100	EL, 10μF, ±20%, 25V
C7763	24667470	EL, 47μF, ±20%, 25V
C7767	24667101	EL, 100μF, ±20%, 25V
C7768	24667101	EL, 100μF, ±20%, 25V
C7769	24232103	CD, 0.01μF, +80%, -20%
C7770	24667471	EL, 470μF, ±20%, 25V
C7771	24667471	EL, 470μF, ±20%, 25V
C7774	24436101	CD, 100pF
C7776	24667100	EL, 10μF, ±20%, 25V
C7779	24436331	CD, 330pF
C7830	24667100	EL, 10μF, ±20%, 25V
⚠C8130	24503001	PF, 0.1μF
C8610	24669478	EL, 0.47μF, ±20%, 50V
C8611	24669478	EL, 0.47μF, ±20%, 50V
C8612	24669478	EL, 0.47μF, ±20%, 50V
C8613	24669478	EL, 0.47μF, ±20%, 50V
CA13	24474101	CD, 100pF, ±10%
CA30	24474101	CD, 100pF, ±10%
CA33	24232103	CD, 0.01μF, +80%, -20%
CA37	24474101	CD, 100pF, ±10%
CA38	24474101	CD, 100pF, ±10%
CA40	24474101	CD, 100pF, ±10%
CA41	24474101	CD, 100pF, ±10%
CA42	24794100	EL, 10μF, ±20%, 16V
CA43	24232103	CD, 0.01μF, +80%, -20%
CA44	24232103	CD, 0.01μF, +80%, -20%
CA68	24794100	EL, 10μF, ±20%, 16V
CA69	24232103	CD, 0.01μF, +80%, -20%
CA80	24794100	EL, 10μF, ±20%, 16V
CA421	24232103	CD, 0.01μF, +80%, -20%
CB01	24794470	EL, 47μF, ±20%, 16V
CB90	24232103	CD, 0.01μF, +80%, -20%
CC01	24212103	CD, 0.01μF, ±10%
CC23	24436220	CD, 22pF
CC33	24436101	CD, 100pF
CF01	24793471	EL, 470μF, ±20%, 10V (50D9UXE/50D9UXA)
CF03	24567104	PF, 0.1μF (50D9UXE/50D9UXA)
CF04	24766101	EL, 100μF, ±20%, 50V (50D9UXE/50D9UXA)
CF05	24766101	EL, 100μF, ±20%, 50V (50D9UXE/50D9UXA)
CF06	24353220	CD, 22pF, CH (50D9UXE/50D9UXA)
CF07	24353220	CD, 22pF, CH (50D9UXE/50D9UXA)
CF08	24567104	PF, 0.1μF (50D9UXE/50D9UXA)
CF09	24567104	PF, 0.1μF (50D9UXE/50D9UXA)
CF10	24206100	EL, 10μF, ±20%, 50V (50D9UXE/50D9UXA)
CF11	24567104	PF, 0.1μF (50D9UXE/50D9UXA)
CF12	24232103	CD, 0.01μF, +80%, -20% (50D9UXE/50D9UXA)

Location No.	Part No.	Description
CF13	24436101	CD, 100pF (50D9UXE/50D9UXA)
CF14	24232103	CD, 0.01μF, +80%, -20% (50D9UXE/50D9UXA)
CF15	24232103	CD, 0.01μF, +80%, -20% (50D9UXE/50D9UXA)
CF16	24567224	PF, 0.22μF (50D9UXE/50D9UXA)
CG01	24567124	PF, 0.12μF
CG02	24567104	PF, 0.1μF
CG03	24567823	PF, 0.082μF
CG04	24206010	EL, 1μF, ±20%, 50V
CG05	24797220	EL, 22μF, ±20%, 50V
CG07	24206010	EL, 1μF, ±20%, 50V
CG08	24206010	EL, 1μF, ±20%, 50V
CG09	24206010	EL, 1μF, ±20%, 50V
CG12	24591273	PF, 0.027μF
CG13	24232103	CD, 0.01μF, +80%, -20%
CG14	24203101	EL, 100μF, ±20%, 16V
CG15	24591822	PF, 8200pF
CG16	24206010	EL, 1μF, ±20%, 50V
CG17	24591273	PF, 0.027μF
CG18	24591822	PF, 8200pF
CG20	24203100	EL, 10μF, ±20%, 16V
CG24	24474102	CD, 1000pF, ±10%
CG25	24206229	EL, 2.2μF, ±20%, 50V
CG26	24206229	EL, 2.2μF, ±20%, 50V
CG30	24203100	EL, 10μF, ±20%, 16V
CG31	24232103	CD, 0.01μF, +80%, -20%
CG32	24232103	CD, 0.01μF, +80%, -20%
CG33	24232103	CD, 0.01μF, +80%, -20%
CR12	24567104	PF, 0.1μF
CR13	24567104	PF, 0.1μF
CR14	24567104	PF, 0.1μF
CR99	24232103	CD, 0.01μF, +80%, -20%
CS01	24206229	EL, 2.2μF, ±20%, 50V
CS02	24206229	EL, 2.2μF, ±20%, 50V
CS03	24797229	EL, 2.2μF, ±20%, 50V
CS05	24206229	EL, 2.2μF, ±20%, 50V
CS06	24206229	EL, 2.2μF, ±20%, 50V
CS07	24206229	EL, 2.2μF, ±20%, 50V
CS08	24206229	EL, 2.2μF, ±20%, 50V
CS09	24206229	EL, 2.2μF, ±20%, 50V
CS14	24206100	EL, 10μF, ±20%, 50V
CS15	24206100	EL, 10μF, ±20%, 50V
CS16	24206229	EL, 2.2μF, ±20%, 50V
CS19	24206478	EL, 0.47μF, ±20%, 50V
CS20	24206100	EL, 10μF, ±20%, 50V
CS21	24206100	EL, 10μF, ±20%, 50V
CS670	24669100	EL, 10μF, ±20%, 50V
CS671	24669100	EL, 10μF, ±20%, 50V
CS672	24212101	CD, 100pF, ±10%
CS673	24212102	CD, 1000pF, ±10%
CS674	24669100	EL, 10μF, ±20%, 50V
CS675	24669100	EL, 10μF, ±20%, 50V
CS676	24669100	EL, 10μF, ±20%, 50V
CS677	24668221	EL, 220μF, ±20%, 35V
CS678	24206229	EL, 2.2μF, ±20%, 50V
CV02	24073077	EL, 0.1μF, ±20%, 50V
CV03	24073077	EL, 0.1μF, ±20%, 50V
CV04	24073077	EL, 0.1μF, ±20%, 50V
CV05	24232103	CD, 0.01μF, +80%, -20%
CV06	24073077	EL, 0.1μF, ±20%, 50V
CV07	24232103	CD, 0.01μF, +80%, -20%

Location No.	Part No.	Description
CV08	24763221	EL, 220μF, ±20%, 16V
CV09	24073077	EL, 0.1μF, ±20%, 50V
CV12	24567104	PF, 0.1μF
CV23	24794101	EL, 100μF, ±20%, 16V
CV24	24232103	CD, 0.01μF, +80%, -20%
CV25	24794220	EL, 22μF, ±20%, 16V
CV26	24567473	PF, 0.047μF
CV35	24474102	CD, 1000pF, ±10%
CV37	24474102	CD, 1000pF, ±10%
CV46	24232103	CD, 0.01μF, +80%, -20%
CV48	24232103	CD, 0.01μF, +80%, -20%
CV51	24666101	EL, 100μF, ±20%, 16V
CV52	24666100	EL, 10μF, ±20%, 16V
CV55	24232103	CD, 0.01μF, +80%, -20%
CV64	24797010	EL, 1μF, ±20%, 50V
CV71	24794471	EL, 470μF, ±20%, 16V
CV73	24212103	CD, 0.01μF, ±10%
CY102	24666221	EL, 220μF, ±20%, 16V
CY103	24232103	CD, 0.01μF, +80%, -20%
CY104	24794101	EL, 100μF, ±20%, 16V
CY109	24232103	CD, 0.01μF, +80%, -20%
CY111	24797479	EL, 4.7μF, ±20%, 50V
CY117	24232103	CD, 0.01μF, +80%, -20%
CY601	24794101	EL, 100μF, ±20%, 16V
CY602	24797479	EL, 4.7μF, ±20%, 50V
CY603	24797479	EL, 4.7μF, ±20%, 50V
CY604	24794102	EL, 1000μF, ±20%, 16V
CY605	24797479	EL, 4.7μF, ±20%, 50V
CY606	24797479	EL, 4.7μF, ±20%, 50V
CY608	24794101	EL, 100μF, ±20%, 16V
CY610	24797478	EL, 0.47μF, ±20%, 50V
CZ01	24474101	CD, 100pF, ±10%
CZ02	24474101	CD, 100pF, ±10%
CZ03	24085901	EL, 0.47μF, ±20%, 50V, Non-Polar
CZ05	24232103	CD, 0.01μF, +80%, -20%
CZ07	24567104	PF, 0.1μF
CZ09	24473220	CD, 22pF
CZ10	24473100	CD, 10pF
CZ11	24473220	CD, 22pF
CZ12	24232103	CD, 0.01μF, +80%, -20%
CZ13	24232103	CD, 0.01μF, +80%, -20%
CZ14	24794100	EL, 10μF, ±20%, 16V
CZ17	24232103	CD, 0.01μF, +80%, -20%
CZ19	24474181	CD, 180pF, ±10%
CZ20	24232103	CD, 0.01μF, +80%, -20%
CZ21	24212122	CD, 1200pF, ±10%
CZ22	24794100	EL, 10μF, ±20%, 16V
CZ23	24232103	CD, 0.01μF, +80%, -20%
CZ24	24232103	CD, 0.01μF, +80%, -20%
CZ25	24794100	EL, 10μF, ±20%, 16V
CZ26	24232103	CD, 0.01μF, +80%, -20%
CZ28	24232103	CD, 0.01μF, +80%, -20%
CZ29	24232103	CD, 0.01μF, +80%, -20%
CZ30	24794100	EL, 10μF, ±20%, 16V
CZ31	24567104	PF, 0.1μF
CZ32	24474101	CD, 100pF, ±10%
CZ33	24473270	CD, 27pF
CZ34	24474101	CD, 100pF, ±10%
CZ35	24473270	CD, 27pF
CZ45	24473100	CD, 10pF

Location No.	Part No.	Description
RESISTORS		
R180	24366103	CF, 10k ohm
R181	24366103	CF, 10k ohm
R185	24366103	CF, 10k ohm
R186	24366103	CF, 10k ohm
R204	24366104	CF, 100k ohm
R205	24366101	CF, 100 ohm
R206	24366221	CF, 220 ohm
R213	24366681	CF, 680 ohm
R214	24366681	CF, 680 ohm
R215	24366681	CF, 680 ohm
R216	24366103	CF, 10k ohm
R218	24366101	CF, 100 ohm
R219	24366101	CF, 100 ohm
R220	24366101	CF, 100 ohm
R229	24366392	CF, 3900 ohm
R230	24366101	CF, 100 ohm
R231	24366222	CF, 2200 ohm
R235	24366222	CF, 2200 ohm
R236	24366101	CF, 100 ohm
R237	24366101	CF, 100 ohm
R238	24366562	CF, 5600 ohm
R241	24367563	CF, 56k ohm, ±2%
R242	24367153	CF, 15k ohm, ±2%
R247	24366102	CF, 1k ohm
R258	24366101	CF, 100 ohm
R259	24366101	CF, 100 ohm
R260	24366222	CF, 2200 ohm
R261	24366681	CF, 680 ohm
R262	24366102	CF, 1k ohm
R263	24366102	CF, 1k ohm
R264	24366103	CF, 10k ohm
R265	24366392	CF, 3900 ohm
R266	24366332	CF, 3300 ohm
R267	24366101	CF, 100 ohm
R269	24366151	CF, 150 ohm
R270	24366102	CF, 1k ohm
R271	24366472	CF, 4700 ohm
R272	24366222	CF, 2200 ohm
R273	24366821	CF, 820 ohm
R274	24366103	CF, 10k ohm
R275	24366392	CF, 3900 ohm
R276	24366102	CF, 1k ohm
R277	24366101	CF, 100 ohm
R278	24366102	CF, 1k ohm
R279	24366332	CF, 3300 ohm
R301	24366103	CF, 10k ohm
R302	24366101	CF, 100 ohm
R303	24366103	CF, 10k ohm
R304	24366103	CF, 10k ohm
R305	24322828	MF, 0.82 ohm, 1W
R306	24366123	CF, 12k ohm
R307	24366101	CF, 100 ohm
R308	24366101	CF, 100 ohm
R310	24366562	CF, 5600 ohm
R312	24366103	CF, 10k ohm
R314	24366473	CF, 47k ohm
R315	24366821	CF, 820 ohm
R316	24366102	CF, 1k ohm
R319	24366100	CF, 10 ohm
R320	24000249	MF, 47k ohm, 1/4W
R321	24366472	CF, 4700 ohm
R322	24000635	MF, 12k ohm, ±1%, 1/4W
R323	24000635	MF, 12k ohm, ±1%, 1/4W

Location No.	Part No.	Description
R324	24366103	CF, 10k ohm
R325	24366472	CF, 4700 ohm
R326	24366103	CF, 10k ohm
R327	24366103	CF, 10k ohm
R328	24000633	MF, 10k ohm, 1/4W
R329	24366103	CF, 10k ohm
R330	24000221	MF, 20k ohm, 1/4W
R331	24019119	MF, 30k ohm, 1/6W
R332	24000525	MF, 4700 ohm, 1/4W
R333	24366103	CF, 10k ohm
R334	24366102	CF, 1k ohm
R335	24366102	CF, 1k ohm
R336	24366102	CF, 1k ohm
R337	24321129	MF, 1.2 ohm, 1/2W
R338	24366123	CF, 12k ohm
R339	24366393	CF, 39k ohm
R340	24366824	CF, 820k ohm
R341	24366273	CF, 27k ohm
R342	24366822	CF, 8200 ohm
R343	24366102	CF, 1k ohm
R344	24382271	OMF, 270 ohm, 1W
R346	24382391	OMF, 390 ohm, 1W
R347	24366103	CF, 10k ohm
R348	24366103	CF, 10k ohm
R349	24366392	CF, 3900 ohm
R350	24366822	CF, 8200 ohm
R351	24366472	CF, 4700 ohm
R360	24366123	CF, 12k ohm
R362	24366103	CF, 10k ohm
R363	24366682	CF, 6800 ohm
R364	24366103	CF, 10k ohm
R370	24366222	CF, 2200 ohm
R371	24366824	CF, 820k ohm
R372	24366333	CF, 33k ohm
R373	24366823	CF, 82k ohm
R374	24366104	CF, 100k ohm
R375	24366153	CF, 15k ohm
R376	24366333	CF, 33k ohm
R377	24366102	CF, 1k ohm
R378	24366562	CF, 5600 ohm
R379	24366103	CF, 10k ohm
R380	24366223	CF, 22k ohm
R381	24366822	CF, 8200 ohm
R385	24366102	CF, 1k ohm
R386	24366103	CF, 10k ohm
R390	24383561	OMF, 560 ohm, 2W
R391	24383561	OMF, 560 ohm, 2W
R392	24383561	OMF, 560 ohm, 2W
R401	24366391	CF, 390 ohm
R403	24366392	CF, 3900 ohm
R403	24382561	OMF, 560 ohm, 1W
R404	24366103	CF, 10k ohm
R405	24366101	CF, 100 ohm
R406	24382222	OMF, 2200 ohm, 1W
R407	24381100	OMF, 10 ohm, 1/2W
R409	24384220	OMF, 22 ohm, 3W
R410	24384220	OMF, 22 ohm, 3W
R411	24323479	MF, 4.7 ohm, 2W
R412	24383223	OMF, 22k ohm, 2W
R413	24366101	CF, 100 ohm
R414	24019259	FR, 27ohm, 1/4W
R416	24383121	OMF, 120 ohm, 2W
R419	24942102	CC, 1k ohm, 1/2W
R421	24382104	OMF, 100k ohm, 1W

Location No.	Part No.	Description
R424	24366103	CF, 10k ohm
R430	24366105	CF, 1M ohm
R431	24383102	OMF, 1k ohm, 2W
R432	24942274	CC, 270k ohm, 1/2W
R433	24942274	CC, 270k ohm, 1/2W
R434	24942274	CC, 270k ohm, 1/2W
R436	24366101	CF, 100 ohm
R443	24310109	MF, 1.0 ohm, 1/2W
R444	24338398	MF, 0.39 ohm, 1W
R445	24366102	CF, 1k ohm
R446	24366153	CF, 15k ohm
R447	24382473	OMF, 47k ohm, 1W
R448	24366103	CF, 10k ohm
R449	24366152	CF, 1500 ohm
R452	24366102	CF, 1k ohm
R453	24366102	CF, 1k ohm
R460	24366103	CF, 10k ohm
R461	24366103	CF, 10k ohm
R462	24366103	CF, 10k ohm
R463	24366103	CF, 10k ohm
R464	24366472	CF, 4700 ohm
R465	24366474	CF, 470k ohm
R467	24366124	CF, 120k ohm
R468	24366153	CF, 15k ohm
R469	24366101	CF, 100 ohm
R470	24366224	CF, 220k ohm
R471	24000112	FR, 10 ohm, 1/4W
R472	24366153	CF, 15k ohm
R473	24000633	MF, 10k ohm, 1/4W
R474	24000358	MF, 1k ohm, 1/4W
R476	24000368	MF, 2700 ohm, 1/4W
R478	24339828	MF, 0.82 ohm, 2W
R479	24366823	CF, 82k ohm
R480	24000639	MF, 22k ohm, 1/4W
R482	24366103	CF, 10k ohm
R483	24366102	CF, 1k ohm
R484	24366474	CF, 470k ohm
R485	24366103	CF, 10k ohm
R486	24366103	CF, 10k ohm
R488	24366392	CF, 3900 ohm
R489	24366222	CF, 2200 ohm
R490	24366331	CF, 330 ohm
R491	24366682	CF, 6800 ohm
R492	24366272	CF, 2700 ohm
R493	24366152	CF, 1500 ohm
R494	24366102	CF, 1k ohm
R498	24366103	CF, 10k ohm
R502	24366101	CF, 100 ohm
R503	24366101	CF, 100 ohm
R504	24366682	CF, 6800 ohm
R505	24366272	CF, 2700 ohm
R506	24366822	CF, 8200 ohm
R507	24366101	CF, 100 ohm
R508	24366472	CF, 4700 ohm
R509	24366101	CF, 100 ohm
R510	24366101	CF, 100 ohm
R513	24366472	CF, 4700 ohm
R514	24366472	CF, 4700 ohm
R515	24366222	CF, 2200 ohm
R516	24366222	CF, 2200 ohm
R518	24366100	CF, 10 ohm
R520	24366100	CF, 10 ohm
R522	24366100	CF, 10 ohm
R524	24366103	CF, 10k ohm

Location No.	Part No.	Description
R526	24366472	CF, 4700 ohm
R562	24366273	CF, 27k ohm
R563	24366392	CF, 3900 ohm
R580	24366681	CF, 680 ohm
R581	24366103	CF, 10k ohm
R590	24366101	CF, 100 ohm
R591	24366472	CF, 4700 ohm
R592	24366472	CF, 4700 ohm
R593	24366102	CF, 1k ohm
R594	24366102	CF, 1k ohm
R595	24366472	CF, 4700 ohm
R596	24366102	CF, 1k ohm
R597	24366821	CF, 820 ohm
R607	24366103	CF, 10k ohm
R608	24366103	CF, 10k ohm
R609	24366103	CF, 10k ohm
R610	24366392	CF, 3900 ohm
R611	24366392	CF, 3900 ohm
R612	24366123	CF, 12k ohm
R613	24366123	CF, 12k ohm
R614	24366562	CF, 5600 ohm
R615	24366562	CF, 5600 ohm
R616	24366229	CF, 2.2 ohm
R617	24366229	CF, 2.2 ohm
R618	24366223	CF, 22k ohm
R619	24366223	CF, 22k ohm
R620	24366104	CF, 100k ohm
R621	24366223	CF, 22k ohm
R622	24366223	CF, 22k ohm
R623	24366223	CF, 22k ohm
R626	24366224	CF, 220k ohm
R688	24552391	OMF, 390 ohm, 1/2W
R690	24552391	OMF, 390 ohm, 1/2W
R702	24552221	OMF, 220 ohm, 1/2W
R709	24366563	CF, 56k ohm
R713	24366273	CF, 27k ohm
R715	24366333	CF, 33k ohm
R716	24366273	CF, 27k ohm
R717	24366333	CF, 33k ohm
R718	24366101	CF, 100 ohm
R719	24366100	CF, 10 ohm
R720	24366102	CF, 1k ohm
R722	24552471	OMF, 470 ohm, 1/2W
R723	24366101	CF, 100 ohm
R724	24366151	CF, 150 ohm
R725	24366821	CF, 820 ohm
R730	24552100	OMF, 10 ohm, 1/2W
R731	24552331	OMF, 330 ohm, 1/2W
R732	24366470	CF, 47 ohm
R733	24366683	CF, 68k ohm
R734	24366470	CF, 47 ohm
R735	24366683	CF, 68k ohm
R736	24553270	OMF, 27 ohm, 1W
R737	24366751	CF, 750 ohm
R738	24366102	CF, 1k ohm
R739	24366751	CF, 750 ohm
R740	24553270	OMF, 27 ohm, 1W
R741	24322399	MF, 3.9 ohm, 1W
R742	24321399	MF, 3.9 ohm, 1/2W
R743	24554221	OMF, 220 ohm, 2W
R744	24366122	CF, 1200 ohm
R745	24366122	CF, 1200 ohm
R761	24366273	CF, 27k ohm
R762	24366563	CF, 56k ohm

Location No.	Part No.	Description
R763	24552331	OMF, 330 ohm, 1/2W
R764	24366470	CF, 47 ohm
R765	24552100	OMF, 10 ohm, 1/2W
R766	24366470	CF, 47 ohm
R767	24552221	OMF, 220 ohm, 1/2W
R768	24366751	CF, 750 ohm
R769	24366122	CF, 1200 ohm
R770	24553270	OMF, 27 ohm, 1W
R771	24322399	MF, 3.9 ohm, 1W
R772	24366683	CF, 68k ohm
R773	24366683	CF, 68k ohm
R774	24366751	CF, 750 ohm
R775	24366122	CF, 1200 ohm
R776	24553270	OMF, 27 ohm, 1W
R777	24321399	MF, 3.9 ohm, 1/2W
R778	24366102	CF, 1k ohm
R779	24554221	OMF, 220 ohm, 2W
R781	24366273	CF, 27k ohm
R782	24366563	CF, 56k ohm
R783	24552221	OMF, 220 ohm, 1/2W
R784	24552100	OMF, 10 ohm, 1/2W
R785	24366470	CF, 47 ohm
R786	24366751	CF, 750 ohm
R787	24366122	CF, 1200 ohm
R788	24366683	CF, 68k ohm
R789	24366683	CF, 68k ohm
R790	24366751	CF, 750 ohm
R791	24366122	CF, 1200 ohm
R792	24366102	CF, 1k ohm
R793	24321399	MF, 3.9 ohm, 1/2W
R794	24553270	OMF, 27 ohm, 1W
R795	24322399	MF, 3.9 ohm, 1W
R796	24554221	OMF, 220 ohm, 2W
R797	24366470	CF, 47 ohm
R798	24552331	OMF, 330 ohm, 1/2W
R799	24553270	OMF, 27 ohm, 1W
R802	24366102	CF, 1k ohm
R803	24366683	CF, 68k ohm
R805	24366101	CF, 100 ohm
R806	24366101	CF, 100 ohm
R807	24367273	CF, 27k ohm, ±2%
R808	24552470	OMF, 47 ohm, 1/2W
R809	24321689	MF, 6.8 ohm, 1/2W
R810	24383680	OMF, 68 ohm, 2W
R811	24552121	OMF, 120 ohm, 1/2W
R812	24552390	OMF, 39 ohm, 1/2W
R814	24552821	OMF, 820 ohm, 1/2W
R816	24384104	OMF, 100k ohm, 3W
⚠R817	24009954	Metal-Glazed Resistor, 2.2M ohm, 1/2W
⚠R819	24009954	Metal-Glazed Resistor, 2.2M ohm, 1/2W
R820	24007061	Cement, 1.8 ohm, ±10%, 2W
R821	24045006	Cement, 4.7 ohm, 7W
R822	24366104	CF, 100k ohm
R823	24553820	OMF, 82 ohm, 1W
R832	24321828	MF, 0.82 ohm, 1/2W
R833	24321189	MF, 1.8 ohm, 1/2W
R834	24366330	CF, 33 ohm
R835	24366150	CF, 15 ohm
R836	24338109	MF, 1 ohm, 1W
R837	24321479	MF, 4.7 ohm, 1/2W
R838	24383333	OMF, 33k ohm, 2W
R839	24383473	OMF, 47k ohm, 2W

Location No.	Part No.	Description
R840	24382124	OMF, 120k ohm, 1W
R841	24366102	CF, 1k ohm
R842	24366332	CF, 3300 ohm
R843	24366332	CF, 3300 ohm
R844	24366473	CF, 47k ohm
R845	24366153	CF, 15k ohm
R846	24366331	CF, 330 ohm
R847	24366331	CF, 330 ohm
R854	24553121	OMF, 120 ohm, 1W
R855	24553271	OMF, 270 ohm, 1W
R856	24366152	CF, 1500 ohm
R857	24381682	OMF, 6800 ohm, 1/2W
R858	24366102	CF, 1k ohm
R859	24382333	OMF, 33k ohm, 1W
⚠R861	24005015	Metal-Glazed Resistor, 8.2M ohm, 1W
R862	24366104	CF, 100k ohm
R863	24366101	CF, 100 ohm
R864	24382333	OMF, 33k ohm, 1W
R865	24545109	FR, 1 ohm, 1/4W
R870	24552100	OMF, 10 ohm, 1/2W
R874	24366109	CF, 1 ohm
R881	24366472	CF, 4700 ohm
R882	24366222	CF, 2200 ohm
R883	24366472	CF, 4700 ohm
R884	24366222	CF, 2200 ohm
R885	24366472	CF, 4700 ohm
R886	24366222	CF, 2200 ohm
R901	24366101	CF, 100 ohm
R903	24942102	CC, 1k ohm, 1/2W
R905	24366470	CF, 47 ohm
R906	24366331	CF, 330 ohm
R908	24366680	CF, 68 ohm
R909	24366470	CF, 47 ohm
R911	24366101	CF, 100 ohm
R912	24019416	MF, 0.1 ohm, 1/2W
R913	24942102	CC, 1k ohm, 1/2W
R915	24366330	CF, 33 ohm
R916	24366331	CF, 330 ohm
R918	24366470	CF, 47 ohm
R919	24366470	CF, 47 ohm
R920	24366153	CF, 15k ohm
R921	24366101	CF, 100 ohm
R923	24942102	CC, 1k ohm, 1/2W
R925	24366470	CF, 47 ohm
R926	24366331	CF, 330 ohm
R927	24366100	CF, 10 ohm
R928	24366680	CF, 68 ohm
R929	24366470	CF, 47 ohm
R930	24366153	CF, 15k ohm
R931	24383153	OMF, 15k ohm, 2W
R932	24383153	OMF, 15k ohm, 2W
R933	24000945	FR, 1.8 ohm, 2W
R936	24383153	OMF, 15k ohm, 2W
R937	24383153	OMF, 15k ohm, 2W
R938	24366150	CF, 15 ohm
R941	24554153	OMF, 15k ohm, 2W
R942	24554153	OMF, 15k ohm, 2W
R943	24554153	OMF, 15k ohm, 2W
R944	24383153	OMF, 15k ohm, 2W
R945	24366150	CF, 15 ohm
R948	24366562	CF, 5600 ohm
R949	24366153	CF, 15k ohm
R951	24554153	OMF, 15k ohm, 2W

Location No.	Part No.	Description
R952	24554153	OMF, 15k ohm, 2W
R953	24554153	OMF, 15k ohm, 2W
R954	24383153	OMF, 15k ohm, 2W
R956	24366101	CF, 100 ohm
R959	24366150	CF, 15 ohm
R961	24366102	CF, 1k ohm
R962	24366361	CF, 360 ohm
R964	24366332	CF, 3300 ohm
R965	24366471	CF, 470 ohm
R966	24366331	CF, 330 ohm
R967	24366681	CF, 680 ohm
R968	24366470	CF, 47 ohm
R969	24366683	CF, 68k ohm
R970	24366393	CF, 39k ohm
R971	24367821	CF, 820 ohm, ±2%
R972	24367471	CF, 470 ohm, ±2%
R973	24367681	CF, 680 ohm, ±2%
R974	24367681	CF, 680 ohm, ±2%
R975	24366561	CF, 560 ohm
R976	24367272	CF, 2700 ohm, ±2%
R977	24367512	CF, 5100 ohm, ±2%
R978	24367391	CF, 390 ohm, ±2%
R983	24366681	CF, 680 ohm
R984	24366821	CF, 820 ohm
R985	24366821	CF, 820 ohm
R986	24366821	CF, 820 ohm
R987	24366470	CF, 47 ohm
R991	24366822	CF, 8200 ohm
R992	24366153	CF, 15k ohm
R3051	24366223	CF, 22k ohm
R4222	24366472	CF, 4700 ohm
R4223	24366103	CF, 10k ohm
R4224	24366272	CF, 2700 ohm
R4225	24366102	CF, 1k ohm
R4403	24366101	CF, 100 ohm
R4404	24366101	CF, 100 ohm
R4406	24366752	CF, 7500 ohm
R4407	24366361	CF, 360 ohm
R4410	24366103	CF, 10k ohm
R4412	24366101	CF, 100 ohm
R4413	24366101	CF, 100 ohm
R4416	24366101	CF, 100 ohm
R4417	24366101	CF, 100 ohm
R4418	24366102	CF, 1k ohm
R4422	24366101	CF, 100 ohm
R4425	24381471	OMF, 470 ohm, 1/2W
R4426	24366152	CF, 1500 ohm
R4427	24366102	CF, 1k ohm
R4428	24366102	CF, 1k ohm
R4430	24366102	CF, 1k ohm
R4431	24366682	CF, 6800 ohm
R4432	24366182	CF, 1800 ohm
R4465	24366103	CF, 10k ohm
R4466	24366102	CF, 1k ohm
R7701	24366104	CF, 100k ohm
R7705	24366154	CF, 150k ohm
R7707	24366472	CF, 4700 ohm
R7708	24366472	CF, 4700 ohm
R7710	24366102	CF, 1k ohm
R7710	24384680	OMF, 68 ohm, 3W
R7711	24323129	MF, 1.2 ohm, 2W
R7712	24366472	CF, 4700 ohm
R7713	24366472	CF, 4700 ohm
R7715	24384680	OMF, 68 ohm, 3W

Location No.	Part No.	Description
R7716	24323129	MF, 1.2 ohm, 2W
R7717	24366472	CF, 4700 ohm
R7718	24366472	CF, 4700 ohm
R7720	24384680	OMF, 68 ohm, 3W
R7721	24323129	MF, 1.2 ohm, 2W
R7722	24366473	CF, 47k ohm
R7723	24366472	CF, 4700 ohm
R7725	24384680	OMF, 68 ohm, 3W
R7726	24323129	MF, 1.2 ohm, 2W
R7727	24366472	CF, 4700 ohm
R7728	24366472	CF, 4700 ohm
R7730	24384680	OMF, 68 ohm, 3W
R7731	24323129	MF, 1.2 ohm, 2W
R7732	24366473	CF, 47k ohm
R7733	24366472	CF, 4700 ohm
R7735	24384680	OMF, 68 ohm, 3W
R7736	24323129	MF, 1.2 ohm, 2W
R7741	24366471	CF, 470 ohm
R7742	24366222	CF, 2200 ohm
R7743	24366223	CF, 22k ohm
R7744	24366102	CF, 1k ohm
R7745	24366222	CF, 2200 ohm
R7746	24366223	CF, 22k ohm
R7747	24366222	CF, 2200 ohm
R7749	24366331	CF, 330 ohm
R7750	24323228	MF, 0.22 ohm, 2W
R7751	24366471	CF, 470 ohm
R7757	24366223	CF, 22k ohm
R7758	24366222	CF, 2200 ohm
R7760	24366103	CF, 10k ohm
R7761	24366333	CF, 33k ohm
R7762	24366103	CF, 10k ohm
R7763	24366471	CF, 470 ohm
R7764	24366331	CF, 330 ohm
R7765	24323338	MF, 0.33 ohm, 2W
R7766	24366223	CF, 22k ohm
R7767	24366153	CF, 15k ohm
R7768	24366100	CF, 10 ohm
R7771	24366102	CF, 1k ohm
R7772	24366102	CF, 1k ohm
R7775	24366273	CF, 27k ohm
R7776	24366472	CF, 4700 ohm
R7777	24366273	CF, 27k ohm
R7778	24366472	CF, 4700 ohm
R7779	24366102	CF, 1k ohm
R7780	24366102	CF, 1k ohm
R7781	24366333	CF, 33k ohm
R7793	24366224	CF, 220k ohm
R7797	24366472	CF, 4700 ohm
R7798	24366103	CF, 10k ohm
R7799	24366222	CF, 2200 ohm
R7880	24366221	CF, 220 ohm
R7881	24366472	CF, 4700 ohm
R7882	24366103	CF, 10k ohm
R7883	24366332	CF, 3300 ohm
R7884	24366103	CF, 10k ohm
R7885	24366103	CF, 10k ohm
R7886	24366154	CF, 150k ohm
R7887	24366103	CF, 10k ohm
R7888	24366153	CF, 15k ohm
R7889	24366153	CF, 15k ohm
R7900	24366471	CF, 470 ohm
R7901	24366471	CF, 470 ohm
R7902	24366332	CF, 3300 ohm

Location No.	Part No.	Description
R8610	24366103	CF, 10k ohm
R8611	24019090	MF, 300k ohm, 1/4W
R8612	24019090	MF, 300k ohm, 1/4W
R8613	24366102	CF, 1k ohm
R8614	24000633	MF, 10k ohm, 1/4W
R8615	24366471	CF, 470 ohm
R8617	24000633	MF, 10k ohm, 1/4W
R8618	24383473	OMF, 47k ohm, 2W
R8619	24366124	CF, 120k ohm
R8620	24366473	CF, 47k ohm
R8621	24366473	CF, 47k ohm
R8622	24366101	CF, 100 ohm
R8623	24366101	CF, 100 ohm
R8624	24366152	CF, 1500 ohm
R8627	24366333	CF, 33k ohm
R8628	24366221	CF, 220 ohm
R9501	24366470	CF, 47 ohm
R9502	24366470	CF, 47 ohm
R9503	24366681	CF, 680 ohm
R9504	24366683	CF, 68k ohm
R9505	24366393	CF, 39k ohm
R9506	24366681	CF, 680 ohm
R9601	24366470	CF, 47 ohm
R9602	24366392	CF, 3900 ohm
R9603	24366332	CF, 3300 ohm
R9604	24366272	CF, 2700 ohm
R9605	24366682	CF, 6800 ohm
R9606	24366272	CF, 2700 ohm
R9607	24366470	CF, 47 ohm
R9608	24366681	CF, 680 ohm
R9609	24366683	CF, 68k ohm
R9610	24366393	CF, 39k ohm
R9611	24366681	CF, 680 ohm
R9612	24366470	CF, 47 ohm
R9613	24366330	CF, 33 ohm
R9614	24366330	CF, 33 ohm
R9701	24366103	CF, 10k ohm
R9702	24366103	CF, 10k ohm
R9703	24366103	CF, 10k ohm
R9704	24366561	CF, 560 ohm
R9705	24366822	CF, 8200 ohm
R9706	24366471	CF, 470 ohm
R9707	24366271	CF, 270 ohm
R9708	24366331	CF, 330 ohm
R9709	24366271	CF, 270 ohm
R9710	24366222	CF, 2200 ohm
R9713	24366102	CF, 1k ohm
R9714	24366102	CF, 1k ohm
R9715	24366102	CF, 1k ohm
RA01	24366102	CF, 1k ohm
RA03	24366102	CF, 1k ohm
RA04	24366102	CF, 1k ohm
RA05	24366102	CF, 1k ohm
RA07	24366102	CF, 1k ohm
RA08	24366102	CF, 1k ohm
RA09	24366102	CF, 1k ohm
RA13	24366682	CF, 6800 ohm
RA14	24366103	CF, 10k ohm
RA16	24366102	CF, 1k ohm
RA17	24366102	CF, 1k ohm
RA18	24366102	CF, 1k ohm
RA22	24366102	CF, 1k ohm
RA24	24366101	CF, 100 ohm
RA25	24366101	CF, 100 ohm

Location No.	Part No.	Description
RA26	24366102	CF, 1k ohm
RA27	24366102	CF, 1k ohm
RA33	24366102	CF, 1k ohm
RA34	24366103	CF, 10k ohm
RA35	24366102	CF, 1k ohm
RA36	24366472	CF, 4700 ohm
RA37	24366101	CF, 100 ohm
RA38	24366101	CF, 100 ohm
RA39	24366102	CF, 1k ohm
RA40	24366331	CF, 330 ohm
RA41	24366331	CF, 330 ohm
RA61	24366103	CF, 10k ohm
RA62	24366103	CF, 10k ohm
RA64	24366103	CF, 10k ohm
RA65	24366332	CF, 3300 ohm
RA66	24366332	CF, 3300 ohm
RA67	24366273	CF, 27k ohm
RA68	24366273	CF, 27k ohm
RA69	24366223	CF, 22k ohm
RA70	24366333	CF, 33k ohm
RA71	24366683	CF, 68k ohm
RA72	24366223	CF, 22k ohm
RA73	24366103	CF, 10k ohm
RA74	24366222	CF, 2200 ohm
RA75	24366333	CF, 33k ohm
RA76	24366103	CF, 10k ohm
RA77	24366223	CF, 22k ohm
RA78	24366102	CF, 1k ohm
RA79	24366223	CF, 22k ohm
RA81	24366102	CF, 1k ohm
RA83	24366102	CF, 1k ohm
RA84	24366102	CF, 1k ohm
RA99	24366103	CF, 10k ohm
RA071	24366333	CF, 33k ohm
RA100	24366102	CF, 1k ohm
RA122	24366221	CF, 220 ohm
RA123	24366221	CF, 220 ohm
RA124	24366221	CF, 220 ohm
RA125	24366221	CF, 220 ohm
RA241	24366472	CF, 4700 ohm
RA251	24366472	CF, 4700 ohm
RA421	24366333	CF, 33k ohm
RA422	24366101	CF, 100 ohm
RB01	24366271	CF, 270 ohm
RB02	24366221	CF, 220 ohm
RB03	24366101	CF, 100 ohm
RB04	24366223	CF, 22k ohm
RB05	24366471	CF, 470 ohm
RB09	24366470	CF, 47 ohm
RB11	24366103	CF, 10k ohm
RB40	24366103	CF, 10k ohm
RB41	24366102	CF, 1k ohm
RB42	24366102	CF, 1k ohm
RB43	24366103	CF, 10k ohm
RB44	24366103	CF, 10k ohm
RB45	24366101	CF, 100 ohm
RB81	24366122	CF, 1200 ohm
RB82	24366123	CF, 12k ohm
RB83	24366123	CF, 12k ohm
RB84	24366562	CF, 5600 ohm
RB90	24366392	CF, 3900 ohm
RB91	24366473	CF, 47k ohm
RB92	24366271	CF, 270 ohm
RB93	24366271	CF, 270 ohm

Location No.	Part No.	Description
RB94	24366222	CF, 2200 ohm
RB95	24366222	CF, 2200 ohm
RB98	24366102	CF, 1k ohm
RC27	24366102	CF, 1k ohm
RF01	24366332	CF, 3300 ohm (50D9UXE/50D9UXA)
RF03	24366682	CF, 6800 ohm (50D9UXE/50D9UXA)
RF04	24366223	CF, 22k ohm (50D9UXE/50D9UXA)
RF06	24366102	CF, 1k ohm (50D9UXE/50D9UXA)
RF08	24366100	CF, 10 ohm (50D9UXE/50D9UXA)
RF09	24366100	CF, 10 ohm (50D9UXE/50D9UXA)
RF10	24366100	CF, 10 ohm (50D9UXE/50D9UXA)
RF11	24366103	CF, 10k ohm (50D9UXE/50D9UXA)
RF12	24366101	CF, 100 ohm (50D9UXE/50D9UXA)
RF13	24366101	CF, 100 ohm (50D9UXE/50D9UXA)
RF14	24366101	CF, 100 ohm (50D9UXE/50D9UXA)
RF15	24366103	CF, 10k ohm (50D9UXE/50D9UXA)
RF16	24366471	CF, 470 ohm (50D9UXE/50D9UXA)
RF20	24366222	CF, 2200 ohm (50D9UXE/50D9UXA)
RF22	24366102	CF, 1k ohm (50D9UXE/50D9UXA)
RF26	24366102	CF, 1k ohm (50D9UXE/50D9UXA)
RF31	24366102	CF, 1k ohm (50D9UXE/50D9UXA)
RF32	24366821	CF, 820 ohm (50D9UXE/50D9UXA)
RF33	24366152	CF, 1500 ohm (50D9UXE/50D9UXA)
RF34	24366102	CF, 1k ohm (50D9UXE/50D9UXA)
RG01	24366333	CF, 33k ohm
RG02	24366333	CF, 33k ohm
RG03	24366101	CF, 100 ohm
RG04	24366101	CF, 100 ohm
RG09	24366472	CF, 4700 ohm
RG10	24366822	CF, 8200 ohm
RG11	24366472	CF, 4700 ohm
RG12	24366822	CF, 8200 ohm
RG15	24366102	CF, 1k ohm
RG16	24366223	CF, 22k ohm
RR10	24366101	CF, 100 ohm
RR63	24366332	CF, 3300 ohm
RR64	24366152	CF, 1500 ohm
RR65	24366102	CF, 1k ohm
RR66	24366101	CF, 100 ohm (50D9UXE/50D9UXA)
RR67	24366271	CF, 270 ohm (50D9UXE/50D9UXA)
RR68	24366332	CF, 3300 ohm
RR69	24366152	CF, 1500 ohm

Location No.	Part No.	Description
RR70	24366222	CF, 2200 ohm
RR71	24366332	CF, 3300 ohm (50D9UXE/50D9UXA)
RR72	24366332	CF, 3300 ohm (50D9UXE/50D9UXA)
RR73	24366102	CF, 1k ohm
RR74	24366102	CF, 1k ohm
RR75	24366102	CF, 1k ohm
RR76	24366103	CF, 10k ohm
RR77	24366392	CF, 3900 ohm
RR79	24366332	CF, 3300 ohm (50D9UXE/50D9UXA)
RR81	24366271	CF, 270 ohm (50D9UXE/50D9UXA)
RR82	24366100	CF, 10 ohm (50D9UXE/50D9UXA)
RR83	24366271	CF, 270 ohm (50D9UXE/50D9UXA)
RR84	24366101	CF, 100 ohm (50D9UXE/50D9UXA)
RR85	24366102	CF, 1k ohm
RR86	24366152	CF, 1500 ohm
RR87	24366332	CF, 3300 ohm
RR88	24366101	CF, 100 ohm
RS01	24366102	CF, 1k ohm
RS02	24366102	CF, 1k ohm
RS03	24366562	CF, 5600 ohm
RS04	24366562	CF, 5600 ohm
RS06	24366272	CF, 2700 ohm
RS07	24366562	CF, 5600 ohm
RS08	24366562	CF, 5600 ohm
RS09	24366562	CF, 5600 ohm
RS10	24366562	CF, 5600 ohm
RS11	24366562	CF, 5600 ohm
RS12	24366562	CF, 5600 ohm
RS13	24366101	CF, 100 ohm
RS14	24366101	CF, 100 ohm
RS15	24366104	CF, 100k ohm
RS16	24366104	CF, 100k ohm
RS17	24366223	CF, 22k ohm
RS18	24366223	CF, 22k ohm
RS19	24366102	CF, 1k ohm
RS20	24366102	CF, 1k ohm
RS21	24366222	CF, 2200 ohm
RS22	24366222	CF, 2200 ohm
RS23	24366101	CF, 100 ohm
RS24	24366101	CF, 100 ohm
RS31	24366103	CF, 10k ohm
RS32	24366104	CF, 100k ohm
RS35	24366104	CF, 100k ohm
RS36	24366223	CF, 22k ohm
RS37	24366102	CF, 1k ohm
RS38	24366222	CF, 2200 ohm
RS39	24366101	CF, 100 ohm
RS40	24366104	CF, 100k ohm
RS41	24366223	CF, 22k ohm
RS42	24366102	CF, 1k ohm
RS43	24366222	CF, 2200 ohm
RS44	24366101	CF, 100 ohm
RS664	24366223	CF, 22k ohm
RS666	24366223	CF, 22k ohm
RS667	24366102	CF, 1k ohm
RS668	24366683	CF, 68k ohm
RS669	24366104	CF, 100k ohm

Location No.	Part No.	Description
RS670	24552152	OMF, 1500 ohm, 1/2W
RS671	24366103	CF, 10k ohm
RS672	24366103	CF, 10k ohm
RS673	24366563	CF, 56k ohm
RS674	24366563	CF, 56k ohm
RS675	24366153	CF, 15k ohm
RS676	24366103	CF, 10k ohm
RS678	24366103	CF, 10k ohm
RS679	24366103	CF, 10k ohm
RS680	24366102	CF, 1k ohm
RS681	24366102	CF, 1k ohm
RV09	24366101	CF, 100 ohm
RV10	24366101	CF, 100 ohm
RV15	24366101	CF, 100 ohm
RV21	24366333	CF, 33k ohm
RV22	24366103	CF, 10k ohm
RV23	24552101	OMF, 100 ohm, 1/2W
RV24	24366471	CF, 470 ohm
RV25	24366101	CF, 100 ohm
RV26	24366152	CF, 1500 ohm
RV30	24366750	CF, 75 ohm
RV31	24366103	CF, 10k ohm
RV32	24366750	CF, 75 ohm
RV34	24366101	CF, 100 ohm
RV37	24366750	CF, 75 ohm
RV52	24366750	CF, 75 ohm
RV61	24366103	CF, 10k ohm
RV62	24366103	CF, 10k ohm
RV63	24366103	CF, 10k ohm
RV64	24366102	CF, 1k ohm
RV66	24366750	CF, 75 ohm
RV67	24366750	CF, 75 ohm
RV71	24366750	CF, 75 ohm
RV73	24366101	CF, 100 ohm
RV74	24366101	CF, 100 ohm
RV80	24366101	CF, 100 ohm
RV88	24366181	CF, 180 ohm
RV95	24366103	CF, 10k ohm
RV98	24366750	CF, 75 ohm
RY02	24366101	CF, 100 ohm
RY03	24366222	CF, 2200 ohm
RY04	24366103	CF, 10k ohm
RY126	24366683	CF, 68k ohm
RY127	24366104	CF, 100k ohm
RY604	24366102	CF, 1k ohm
RY605	24366104	CF, 100k ohm
RY606	24366393	CF, 39k ohm
RY607	24366153	CF, 15k ohm
RY608	24366152	CF, 1500 ohm
RY609	24366391	CF, 390 ohm
RY610	24382560	OMF, 56 ohm, 1W
RY613	24382820	OMF, 82 ohm, 1W
RY614	24366103	CF, 10k ohm
RY615	24366223	CF, 22k ohm
RY616	24366104	CF, 100k ohm
RY630	24366100	CF, 10 ohm
RY631	24366100	CF, 10 ohm
RZ01	24366102	CF, 1k ohm
RZ01	24366272	CF, 2700 ohm
RZ02	24366102	CF, 1k ohm
RZ02	24366272	CF, 2700 ohm
RZ03	24366102	CF, 1k ohm
RZ03	24366332	CF, 3300 ohm
RZ04	24366102	CF, 1k ohm

Location No.	Part No.	Description
RZ04	24366102	CF, 1k ohm
RZ05	24366102	CF, 1k ohm
RZ05	24366391	CF, 390 ohm
RZ06	24366102	CF, 1k ohm
RZ06	24366821	CF, 820 ohm
RZ08	24366391	CF, 390 ohm
RZ09	24366101	CF, 100 ohm
RZ13	24366102	CF, 1k ohm
RZ14	24366102	CF, 1k ohm
RZ15	24366102	CF, 1k ohm
RZ17	24366391	CF, 390 ohm
RZ18	24366391	CF, 390 ohm
RZ20	24366101	CF, 100 ohm
RZ29	24366331	CF, 330 ohm
RZ30	24366331	CF, 330 ohm

COILS & TRANSFORMERS

Location No.	Part No.	Description
L101	23248035	Coil, Choke, TLN3278D
L103	23238714	Coil, Peaking, TRF4100AJ
L104	23238714	Coil, Peaking, TRF4100AJ
L200	23103852	Coil, Filter, TEM2028AH
L301	23237975	Coil, Peaking, TRF4101AC
L302	23248073	Coil, Choke, TLN3299D
L303	23248073	Coil, Choke, TLN3299D
L304	23103859	Coil (Ferrite Bead), TEM2011
L305	23238710	Coil, Peaking, TRF4220AJ
L400	23237975	Coil, Peaking, TRF4101AC
L400	23289101	Coil, Peaking, TRF4101AF
L441	23233995	Coil, Linearity, TLN2215AG
L461	23248191	Coil, Choke, TLN3351AD
L462	23231313	Deflection Yoke, TDY707NS
L463	23231313	Deflection Yoke, TDY707NS
L464	23231313	Deflection Yoke, TDY707NS
L465	23103859	Coil (Ferrite Bead), TEM2011
L466	23103775	Coil (Ferrite Bead), TEM2014
L467	23103775	Coil (Ferrite Bead), TEM2014
L472	23102441	Magnet, MAG-1094
L473	23102441	Magnet, MAG-1094
L474	23102441	Magnet, MAG-1094
L481	23237975	Coil, Peaking, TRF4101AC
L501	23238714	Coil, Peaking, TRF4100AJ
L503	23289844	Coil, Peaking, TRF4470AT
L504	23289840	Coil, Peaking, TRF4100AT
L506	23289840	Coil, Peaking, TRF4100AT
L701	23237987	Coil, Peaking, TRF4100AC
L702	23261974	Coil, Choke, HC5-035
L704	23103859	Coil (Ferrite Bead), TEM2011
L705	23103859	Coil (Ferrite Bead), TEM2011
L764	23103859	Coil (Ferrite Bead), TEM2011
L765	23103859	Coil (Ferrite Bead), TEM2011
L766	23261974	Coil, Choke, HC5-035
L769	23237987	Coil, Peaking, TRF4100AC
L780	23237987	Coil, Peaking, TRF4100AC
L781	23103859	Coil (Ferrite Bead), TEM2011
L782	23103859	Coil (Ferrite Bead), TEM2011
L783	23261974	Coil, Choke, HC5-035
L804	23103859	Coil (Ferrite Bead), TEM2011
L830	23280025	Coil, Peaking, TRF4331AZ
L831	23280022	Coil, Peaking, TRF4101AZ
L833	23289842	Coil, Peaking, TRF4220AT
L835	23248087	Coil, Choke, TLN3312D
L856	23103859	Coil (Ferrite Bead), TEM2011
L857	23103859	Coil (Ferrite Bead), TEM2011
L858	23103859	Coil (Ferrite Bead), TEM2011

Location No.	Part No.	Description
L859	23103859	Coil (Ferrite Bead), TEM2011
L861	23103859	Coil (Ferrite Bead), TEM2011
L862	23248073	Coil, Choke, TLN3299D
L863	23103859	Coil (Ferrite Bead), TEM2011
L864	23103859	Coil (Ferrite Bead), TEM2011
L865	23103859	Coil (Ferrite Bead), TEM2011
L866	23248073	Coil, Choke, TLN3299D
L867	70211045	Coil, Choke, 0.02mH
L868	23103859	Coil (Ferrite Bead), TEM2011
L869	23103859	Coil (Ferrite Bead), TEM2011
L870	23248073	Coil, Choke, TLN3299D
L871	70211045	Coil, Choke, 0.02mH
L872	23248073	Coil, Choke, TLN3299D
L873	70211045	Coil, Choke, 0.02mH
L874	70211045	Coil, Choke, 0.02mH
L901	23237975	Coil, Peaking, TRF4101AC
L902	23238714	Coil, Peaking, TRF4100AJ
L903	23289680	Coil, Peaking, TRF4680AF
L911	23237987	Coil, Peaking, TRF4100AC
L912	23289680	Coil, Peaking, TRF4680AF
L913	23238714	Coil, Peaking, TRF4100AJ
L915	23289109	Coil, Peaking, TRF41R0AF
L922	23289680	Coil, Peaking, TRF4680AF
L923	23238714	Coil, Peaking, TRF4100AJ
L925	23289109	Coil, Peaking, TRF41R0AF
L961	23289840	Coil, Peaking, TRF4100AT
L962	23289109	Coil, Peaking, TRF41R0AF
L7701	23103859	Coil (Ferrite Bead), TEM2011
L7702	23103859	Coil (Ferrite Bead), TEM2011
L7703	23103859	Coil (Ferrite Bead), TEM2011
L7704	23103859	Coil (Ferrite Bead), TEM2011
L7705	23103859	Coil (Ferrite Bead), TEM2011
L7706	23103859	Coil (Ferrite Bead), TEM2011
L7710	23248195	Coil, Choke, TLN3441AT
L7711	23248195	Coil, Choke, TLN3441AT
L7712	23248195	Coil, Choke, TLN3441AT
L7713	23248195	Coil, Choke, TLN3441AT
LA01	23289100	Coil, Peaking, TRF4100AF
LB02	23262281	Coil, IF, TRF1197D
LC05	23238562	Coil, Peaking, TRF4109AJ
LC06	23103859	Coil (Ferrite Bead), TEM2011
LF01	23238506	Coil, Peaking, TRF4229AJ (50D9UXE/50D9UXA)
LF02	23238506	Coil, Peaking, TRF4229AJ (50D9UXE/50D9UXA)
LF03	23238506	Coil, Peaking, TRF4229AJ (50D9UXE/50D9UXA)
LF04	23238506	Coil, Peaking, TRF4229AJ (50D9UXE/50D9UXA)
LF06	23238562	Coil, Peaking, TRF4109AJ (50D9UXE/50D9UXA)
LF07	23238562	Coil, Peaking, TRF4109AJ (50D9UXE/50D9UXA)
LF08	23238714	Coil, Peaking, TRF4100AJ (50D9UXE/50D9UXA)
LF09	23238714	Coil, Peaking, TRF4100AJ (50D9UXE/50D9UXA)
LF10	23238562	Coil, Peaking, TRF4109AJ (50D9UXE/50D9UXA)
LF11	23289109	Coil, Peaking, TRF41R0AF (50D9UXE/50D9UXA)
LF12	23238714	Coil, Peaking, TRF4100AJ (50D9UXE/50D9UXA)

Location No.	Part No.	Description
LF13	23289100	Coil, Peaking, TRF4100AF (50D9UXE/50D9UXA)
LF16	23289121	Coil, Peaking, TRF4121AF (50D9UXE/50D9UXA)
LR21	23103898	Coil, Filter, TEM2030AH
LR22	23103898	Coil, Filter, TEM2030AH
LR23	23103898	Coil, Filter, TEM2030AH
LV02	23103852	Coil, Filter, TEM2028AH
LV06	23103852	Coil, Filter, TEM2028AH
LV47	23238705	Coil, Peaking, TRF4560AJ
LY101	23221803	Coil, Choke, TLN3040D
LZ01	23238710	Coil, Peaking, TRF4220AJ
LZ02	23238714	Coil, Peaking, TRF4100AJ
LZ02	23289100	Coil, Peaking, TRF4100AF
LZ03	23238714	Coil, Peaking, TRF4100AJ
LZ04	23238714	Coil, Peaking, TRF4100AJ
LZ05	23238714	Coil, Peaking, TRF4100AJ
LZ08	23238707	Coil, Peaking, TRF4390AJ
LZ09	70131060	Baze Filter, ZBF253D-00
LZ10	70131060	Baze Filter, ZBF253D-00
LZ11	70131060	Baze Filter, ZBF253D-00
T400	23224364	Transformer, Focus, TLN2168AH
T401	23224371	Transformer, Horiz, Drive, TLN1080AH
T402	23248248	Coil, Choke, TLN3500AH
⚠T461A	23192940	Anode Cap, TCCP5157
T461B	23960136	Adhesive, TSE3843-W
⚠T461Z	23236628	Transformer, Flyback, TFB3087ZD
⚠T801	23211713	Line Filter, TRF3197AQ
⚠T802	23211713	Line Filter, TRF3197AQ
⚠T803	23211698	Line Filter, TRF3218AK
T804	23211713	Line Filter, TRF3197AQ
T830	23211661	Line Filter, TRF3192
⚠T862	23217467	Transformer, Converter, TPW3450AS

SEMICONDUCTORS

Q180	23114528	Transistor, 2SC1740S, Q
Q185	23114528	Transistor, 2SC1740S, Q
Q201	A6317440	Transistor, 2SC1815-Y
Q202	23114530	Transistor, 2SA933S-Q
Q203	23114530	Transistor, 2SA933S-Q
Q204	23114530	Transistor, 2SA933S-Q
Q206	23114528	Transistor, 2SC1740S, Q
Q209	23114530	Transistor, 2SA933S-Q
Q210	23114530	Transistor, 2SA933S-Q
Q211	23114528	Transistor, 2SC1740S, Q
Q212	23114528	Transistor, 2SC1740S, Q
Q237	23114528	Transistor, 2SC1740S, Q
Q261	23114530	Transistor, 2SA933S-Q
Q262	23114528	Transistor, 2SC1740S, Q
Q263	23114528	Transistor, 2SC1740S, Q
Q301	23319787	IC, LA7833S
Q301B	70391355	Screw, BITTB3X8 SZN
Q302	B0384625	IC, TA8859CP
Q304	B0347500	IC, TA75358P
Q305	23114530	Transistor, 2SA933S-Q
Q306	B0351501	IC, TA75902P(J)
Q307	B0347500	IC, TA75358P
Q308	23314548	Transistor, 2SC4256
Q370	23114528	Transistor, 2SC1740S, Q
Q371	23114530	Transistor, 2SA933S-Q

Location No.	Part No.	Description
Q372	23114528	Transistor, 2SC1740S, Q
Q402	A6064650	Transistor, 2SK941
Q404	A6371775	Transistor, 2SC5144
Q404B	A8012650	Spacer, AC263
Q404D	72471082	Screw, BRDT2W3X10 SZN
Q405	23114530	Transistor, 2SA933S-Q
Q406	23114528	Transistor, 2SC1740S, Q
Q425	23114528	Transistor, 2SC1740S, Q
Q426	A6002060	Transistor, RN1206
Q427	A6002060	Transistor, RN1206
Q428	A6002060	Transistor, RN1206
Q460	23314916	Transistor, 2SK947-R
Q461	B0347500	IC, TA75358P
Q462	23114528	Transistor, 2SC1740S, Q
Q481	B0347235	IC, TA75339AP
Q501	B01A7048	IC, TB1274N
Q502	23114528	Transistor, 2SC1740S, Q
Q503	23114530	Transistor, 2SA933S-Q
Q504	23114530	Transistor, 2SA933S-Q
Q505	23114528	Transistor, 2SC1740S, Q
Q510	B0386208	IC, TA1276AN
Q520	23114528	Transistor, 2SC1740S, Q
Q580	23114528	Transistor, 2SC1740S, Q
Q601	B0376885	IC, TA8216H
Q601B	70391356	Screw, BITTB3X10 SZN
Q611	A6342200	Transistor, 2CS2878-A
Q612	A6342200	Transistor, 2CS2878-A
Q613	23114528	Transistor, 2SC1740S, Q
Q614	A6002040	Transistor, RN1204
Q615	23114530	Transistor, 2SA933S-Q
Q616	23114530	Transistor, 2SA933S-Q
Q706	23114528	Transistor, 2SC1740S, Q
Q707	A6734590	Transistor, 2SC752(G)TM-Y
Q709	23114528	Transistor, 2SC1740S, Q
Q710	23114530	Transistor, 2SA933S-Q
Q711	23314911	Transistor, 2SB1569A E
Q711B	70391355	Screw, BITTB3X8 SZN
Q712	23314914	Transistor, 2SD2400A E
Q712B	70391355	Screw, BITTB3X8 SZN
Q719	23114528	Transistor, 2SC1740S, Q
Q720	23114528	Transistor, 2SC1740S, Q
Q751	23905094	IC, STR392-110
Q752	23905094	IC, STR392-110
Q755	23904521	IC, AN7805
Q755B	70391355	Screw, BITTB3X8 SZN
Q757	23114528	Transistor, 2SC1740S, Q
Q758	23114528	Transistor, 2SC1740S, Q
Q759	23114530	Transistor, 2SA933S-Q
Q760	23114530	Transistor, 2SA933S-Q
Q761	23114530	Transistor, 2SA933S-Q
Q761	23314911	Transistor, 2SB1569A E
Q761B	70391355	Screw, BITTB3X8 SZN
Q762	23114528	Transistor, 2SC1740S, Q
Q764	B0485895	IC, TC74HC14AP
Q765	23114528	Transistor, 2SC1740S, Q
Q766	23114528	Transistor, 2SC1740S, Q
Q767	B0470188	IC, TC4066BP(N)
Q769	23114528	Transistor, 2SC1740S, Q
Q771	23314914	Transistor, 2SD2400A E
Q771B	70391355	Screw, BITTB3X8 SZN
Q772	23114530	Transistor, 2SA933S-Q
Q773	23114528	Transistor, 2SC1740S, Q
Q779	23114528	Transistor, 2SC1740S, Q
Q781	23114528	Transistor, 2SC1740S, Q

Location No.	Part No.	Description
Q782	23114530	Transistor, 2SA933S-Q
Q782	23318840	IC, AN79M05F
Q782B	70391355	Screw, BITTB3X8 SZN
Q783	23114528	Transistor, 2SC1740S, Q
Q784	23314911	Transistor, 2SB1569A E
Q784B	70391355	Screw, BITTB3X8 SZN
Q785	23314914	Transistor, 2SD2400A E
Q785B	70391355	Screw, BITTB3X8 SZN
Q796	23114528	Transistor, 2SC1740S, Q
Q797	B0349260	IC, TA75358P
Q798	B0470188	IC, TC4066BP(N)
Q801	23135015	IC, STR-Z4369
Q811	A6002060	Transistor, RN1206
Q812	23114528	Transistor, 2SC1740S, Q
Q821	A6002060	Transistor, RN1206
Q824	23114528	Transistor, 2SC1740S, Q
Q825	23905977	IC, PQ09RD11
Q825B	70391355	Screw, BITTB3X8 SZN
Q826	23905977	IC, PQ09RD11
Q826B	70391355	Screw, BITTB3X8 SZN
Q827	23905976	IC, PQ05RD11
Q827B	70391355	Screw, BITTB3X8 SZN
Q828	23905976	IC, PQ05RD11
Q828B	70391355	Screw, BITTB3X8 SZN
Q829	23905976	IC, PQ05RD11
Q829B	70391355	Screw, BITTB3X8 SZN
Q830	23135004	IC, STR83145A
Q830B	70391355	Screw, BITTB3X8 SZN
Q831	23114528	Transistor, 2SC1740S, Q
Q832	23114530	Transistor, 2SA933S-Q
Q833	23000140	IC, MM1437AS
⚠Q862	A8643112	Photo Coupler, TLP621(GRL-L
Q901	A6372621	Transistor, 2SC5360
Q902	23114528	Transistor, 2SC1740S, Q
Q911	A6372621	Transistor, 2SC5360
Q912	23114528	Transistor, 2SC1740S, Q
Q913	23114530	Transistor, 2SA933S-Q
Q914	23114528	Transistor, 2SC1740S, Q
Q915	23114528	Transistor, 2SC1740S, Q
Q916	23114530	Transistor, 2SA933S-Q
Q917	23114530	Transistor, 2SA933S-Q
Q918	23114528	Transistor, 2SC1740S, Q
Q919	23114528	Transistor, 2SC1740S, Q
Q920	23114528	Transistor, 2SC1740S, Q
Q921	A6372621	Transistor, 2SC5360
Q922	23114528	Transistor, 2SC1740S, Q
Q961	23114528	Transistor, 2SC1740S, Q
Q962	23114530	Transistor, 2SA933S-Q
Q963	23114528	Transistor, 2SC1740S, Q
Q964	23114530	Transistor, 2SA933S-Q
Q965	23114528	Transistor, 2SC1740S, Q
Q966	23114530	Transistor, 2SA933S-Q
Q968	23114528	Transistor, 2SC1740S, Q
Q971	23114530	Transistor, 2SA933S-Q
Q972	23114530	Transistor, 2SA933S-Q
Q973	23114530	Transistor, 2SA933S-Q
Q974	23114528	Transistor, 2SC1740S, Q
Q975	A6734590	Transistor, 2SC752(G)TM-Y
Q4420	B01A0067	IC, TA1300AN
Q4430	23114530	Transistor, 2SA933S-Q
Q4465	23114530	Transistor, 2SA933S-Q
Q8610	B0349261	IC, TA75393P(FA2
⚠Q8611	A8643112	Photo Coupler, TLP621(GRL-L
Q8612	23114528	Transistor, 2SC1740S, Q

Location No.	Part No.	Description
Q8630	23114528	Transistor, 2SC1740S, Q
Q8631	23114528	Transistor, 2SC1740S, Q
QA01	23000565	IC, 750011-142S
QA02	23906642	IC, AT24C64-10PC
QA05	A6734590	Transistor, 2SC752(G)TM-Y
QA10	23114530	Transistor, 2SA933S-Q
QB02	23114530	Transistor, 2SA933S-Q
QB03	A6002050	Transistor, RN1205
QB81	A6342200	Transistor, 2CS2878-A
QB82	A6342200	Transistor, 2CS2878-A
QB83	23114530	Transistor, 2SA933S-Q
QB92	23114528	Transistor, 2SC1740S, Q
QB93	23114530	Transistor, 2SA933S-Q
QB94	23114530	Transistor, 2SA933S-Q
QB95	23114530	Transistor, 2SA933S-Q
QB96	23114530	Transistor, 2SA933S-Q
QF01	23906822	IC, SDA5273-2S C (50D9UXE/50D9UXA)
QF03	23114528	Transistor, 2SC1740S, Q (50D9UXE/50D9UXA)
QF04	A6734590	Transistor, 2SC752(G)TM-Y (50D9UXE/50D9UXA)
QF07	23114528	Transistor, 2SC1740S, Q (50D9UXE/50D9UXA)
QF08	23114530	Transistor, 2SA933S-Q (50D9UXE/50D9UXA)
QG01	B0385643	IC, TA1216AN
QR35	23114528	Transistor, 2SC1740S, Q
QR36	23114528	Transistor, 2SC1740S, Q
QR37	23114530	Transistor, 2SA933S-Q (50D9UXE/50D9UXA)
QR38	23114528	Transistor, 2SC1740S, Q
QR39	23114530	Transistor, 2SA933S-Q (50D9UXE/50D9UXA)
QR40	23114528	Transistor, 2SC1740S, Q
QR41	23114530	Transistor, 2SA933S-Q (50D9UXE/50D9UXA)
QR70	A6734590	Transistor, 2SC752(G)TM-Y
QS01	A6342200	Transistor, 2CS2878-A
QS02	A6342200	Transistor, 2CS2878-A
QS03	23114528	Transistor, 2SC1740S, Q
QS04	23114528	Transistor, 2SC1740S, Q
QS07	A6010040	Transistor, RN2004
QS08	A6342200	Transistor, 2CS2878-A
QS09	23114528	Transistor, 2SC1740S, Q
QS10	A6342200	Transistor, 2CS2878-A
QS11	23114528	Transistor, 2SC1740S, Q
QS671	23906596	IC, BA4558
QS672	A6342200	Transistor, 2CS2878-A
QS673	A6010040	Transistor, RN2004
QV01	23000369	IC, MM1495XD
QV07	A6002030	Transistor, RN1203
QV08	23114528	Transistor, 2SC1740S, Q
QV09	23114528	Transistor, 2SC1740S, Q
QV11	A6002030	Transistor, RN1203
QV13	A6317440	Transistor, 2SC1815-Y
QV51	23114528	Transistor, 2SC1740S, Q
QY10	A6534060	Transistor, 2SA1015-GR
QY601	23318255	IC, μPC1406HA
QY602	23114528	Transistor, 2SC1740S, Q
QY604	A6342200	Transistor, 2CS2878-A
QY605	23114529	Transistor, 2SA933S-R
QY606	A6010040	Transistor, RN2004
QZ01	23114530	Transistor, 2SA933S-Q

Location No.	Part No.	Description
QZ01	B0410895	IC, TC90A49P
QZ02	23114528	Transistor, 2SC1740S, Q
QZ02	23114530	Transistor, 2SA933S-Q
QZ04	23114530	Transistor, 2SA933S-Q
QZ05	23114530	Transistor, 2SA933S-Q
QZ07	23114530	Transistor, 2SA933S-Q
QZ08	23114528	Transistor, 2SC1740S, Q
D101	23316756	Diode, Zener, MTZJ33D
D201	23118859	Diode, 1SS133
D301	23118520	Diode, Zener, RD8.2ESA B2
D302	23118094	Diode, EU2A, LF-F10
D303	23118499	Diode, Zener, RD18ESA B2
D304	23316794	Diode, SC570ALFE2
D305	23118822	Diode, ERB12-02
D306	23118822	Diode, ERB12-02
D312	23118859	Diode, 1SS133
D338	23118859	Diode, 1SS133
D370	23118859	Diode, 1SS133
D371	23118859	Diode, 1SS133
D401	23118094	Diode, EU2A, LF-F10
D402	23118094	Diode, EU2A, LF-F10
D404	23316254	Diode, ERC06-15L
D405	23316720	Diode, Zener, MTZJ12C
D406	A7978850	Diode, S5295G
D411	23118499	Diode, Zener, RD18ESA B2
D413	23118707	Diode, RP 1H, LF-C1
D414	23118094	Diode, EU2A, LF-F10
D415	23118094	Diode, EU2A, LF-F10
D416	23118707	Diode, RP 1H, LF-C1
D422	23118518	Diode, Zener, RD9.1ESA B1
D424	23118859	Diode, 1SS133
D448	23118094	Diode, EU2A, LF-F10
D450	23118859	Diode, 1SS133
D461	23224366	Diode, FMQ-3GU
D462	23118499	Diode, Zener, RD18ESA B2
D471	23118094	Diode, EU2A, LF-F10
D473	23115774	Diode, Zener, RD6.2E(4)
D481	23118859	Diode, 1SS133
D490	23118530	Diode, Zener, RD5.6ESA B1
D498	23118859	Diode, 1SS133
D501	23118859	Diode, 1SS133
D580	23118528	Diode, Zener, RD5.6ESA B3
D610	23118859	Diode, 1SS133
D611	23118859	Diode, 1SS133
D612	23118859	Diode, 1SS133
D613	23118859	Diode, 1SS133
D614	23118859	Diode, 1SS133
D615	23118859	Diode, 1SS133
D616	23118859	Diode, 1SS133
D617	23118859	Diode, 1SS133
D618	23118859	Diode, 1SS133
D704	23118859	Diode, 1SS133
D705	23118859	Diode, 1SS133
D715	23118859	Diode, 1SS133
D721	23118859	Diode, 1SS133
D761	23118859	Diode, 1SS133
D762	23118859	Diode, 1SS133
D763	23118859	Diode, 1SS133
D764	23118859	Diode, 1SS133
D781	23118859	Diode, 1SS133
D782	23118859	Diode, 1SS133
D783	23118859	Diode, 1SS133
D784	23118859	Diode, 1SS133
D803	23316787	Diode, D15XB60H, F5

Location No.	Part No.	Description
D803B	70391355	Screw, BITTB3X8 SZN
D804	23118537	Diode, Zener, RD6.2ESA B3
D805	23118518	Diode, Zener, RD9.1ESA B1
D806	23118615	Diode, Zener, RD27ESA B3
D809	23118602	Diode, Zener, RD36ESA B4
D810	23118615	Diode, Zener, RD27ESA B3
D811	23118057	Diode, AG01A
D812	23118516	Diode, Zener, RD9.1ESA B3
D813	23118060	Diode, AL01Z
D814	23118529	Diode, Zener, RD5.6ESA B2
D816	24000656	Varistor, TNR15G471K
D819	23118859	Diode, 1SS133
D820	23118515	Diode, Zener, RD11ESA B1
D821	23118537	Diode, Zener, RD6.2ESA B3
D822	23118859	Diode, 1SS133
D825	23115532	Diode, ERB12-01E
D826	23115532	Diode, ERB12-01E
D827	23115532	Diode, ERB12-01E
D828	23115532	Diode, ERB12-01E
D829	23115532	Diode, ERB12-01E
D831	23118621	Diode, Zener, RD10ESA B3
D832	23118621	Diode, Zener, RD10ESA B3
D833	23118532	Diode, Zener, RD5.1ESA B2
D834	23118529	Diode, Zener, RD5.6ESA B2
D835	23357207	Diode, LN1WBA60
D836	A7568200	Diode, 1S1832
D837	23118525	Diode, Zener, RD6.8ESA B3
D838	23118536	Diode, Zener, RD4.7ESA B1
D839	70612402	Diode, SF5J42
D854	23357214	Diode, D4SBS4
D855	23357215	Diode, D4SBS6
D855B	70391355	Screw, BITTB3X8 SZN
D856	23357216	Diode, D4SBL20U
D858	23118859	Diode, 1SS133
D859	23316768	Diode, FMB-26L
D859B	70391355	Screw, BITTB3X8 SZN
D860	23357217	Diode, D4SBL40
D860B	70391355	Screw, BITTB3X8 SZN
D862	23118859	Diode, 1SS133
D863	23316553	Diode, 1SS145
D86B	70391355	Screw, BITTB3X8 SZN
D891	23118859	Diode, 1SS133
D901	23118859	Diode, 1SS133
D902	23118859	Diode, 1SS133
D911	23118859	Diode, 1SS133
D912	23118859	Diode, 1SS133
D921	23118859	Diode, 1SS133
D922	23118859	Diode, 1SS133
D924	23118859	Diode, 1SS133
D925	23118859	Diode, 1SS133
D931	23118859	Diode, 1SS133
D932	23118859	Diode, 1SS133
D933	23118859	Diode, 1SS133
D934	23118859	Diode, 1SS133
D936	A7568250	Diode, 1S1834
D941	23118859	Diode, 1SS133
D942	23118859	Diode, 1SS133
D943	23118859	Diode, 1SS133
D945	A7568250	Diode, 1S1834
D946	23118859	Diode, 1SS133
D963	23118859	Diode, 1SS133
D964	23118859	Diode, 1SS133
D965	23118859	Diode, 1SS133
D966	23118859	Diode, 1SS133

Location No.	Part No.	Description
D967	A7568250	Diode, 1S1834
D4223	23115532	Diode, ERB12-01E
D7701	23118859	Diode, 1SS133
D7702	23118859	Diode, 1SS133
D7705	23118859	Diode, 1SS133
D7706	23118859	Diode, 1SS133
D7707	23118859	Diode, 1SS133
D7708	23118859	Diode, 1SS133
D7709	23118538	Diode, Zener, RD6.2ESA B2
D7714	23118859	Diode, 1SS133
D7715	23118859	Diode, 1SS133
D7716	23118859	Diode, 1SS133
D7717	23118538	Diode, Zener, RD6.2ESA B2
D7718	23118538	Diode, Zener, RD6.2ESA B2
D7719	23118538	Diode, Zener, RD6.2ESA B2
D7720	23118538	Diode, Zener, RD6.2ESA B2
D7721	23118538	Diode, Zener, RD6.2ESA B2
D7722	23118538	Diode, Zener, RD6.2ESA B2
D7730	23118538	Diode, Zener, RD6.2ESA B2
D7736	23118538	Diode, Zener, RD6.2ESA B2
D7738	23118859	Diode, 1SS133
D7739	23118859	Diode, 1SS133
D7740	23118859	Diode, 1SS133
D7741	23118859	Diode, 1SS133
D7742	23118859	Diode, 1SS133
D7743	23118859	Diode, 1SS133
D7745	23118859	Diode, 1SS133
D7746	23118859	Diode, 1SS133
D7747	23118859	Diode, 1SS133
D7748	23118859	Diode, 1SS133
D7749	23118859	Diode, 1SS133
D7760	23118859	Diode, 1SS133
D7806	23118859	Diode, 1SS133
D7810	23118859	Diode, 1SS133
D8610	23115774	Diode, Zener, RD6.2E(4)
D8611	23118610	Diode, Zener, RD30ESA B4
D8612	23118613	Diode, Zener, RD30ESA B1
D8613	23118532	Diode, Zener, RD5.1ESA B2
D8614	23118537	Diode, Zener, RD6.2ESA B3
D8615	23118859	Diode, 1SS133
D8616	23118517	Diode, Zener, RD9.1ESA B2
D8617	23118532	Diode, Zener, RD5.1ESA B2
DA421	23118529	Diode, Zener, RD5.6ESA B2
DB01	23358541	Diode (LED), 4343VRT
DB02	23358503	Diode (LED), SCL003MC3FX
DB03	23358522	Diode (LED), SIR-56SB3F
DF01	23316654	Diode, Zener, MTZJ3.0A (50D9UXE/50D9UXA)
DR61	23118859	Diode, 1SS133 (50D9UXE/50D9UXA)
DR62	23118859	Diode, 1SS133 (50D9UXE/50D9UXA)
DR63	23118859	Diode, 1SS133 (50D9UXE/50D9UXA)
DS671	23118495	Diode, Zener, RD22ESA B3
DV10	23118859	Diode, 1SS133
DY601	23118859	Diode, 1SS133
DY602	23118859	Diode, 1SS133

MISCELLANEOUS

Location No.	Part No.	Description
B107	23711305	Screw, PP3X.5X5BNI
B224	23035412	Screw, BTB 4X12 SZN
B225	23035412	Screw, BTB 4X12 SZN
B230	23037312	Screw, BTBW 3X12 SZN
B233	23035412	Screw, BTB 4X12 SZN
B234	23030937	Screw, BTBW 3X12 SBN
B237	23035412	Screw, BTB 4X12 SZN
B239	23035412	Screw, BTB 4X12 SZN
B330	23037312	Screw, BTBW 3X12 SZN
B332	23037312	Screw, BTBW 3X12 SZN
BB14A	23903022	Socket, 8P
BB14B	23903022	Socket, 8P
BB14C	23368627	Plug, 8P
BB15A	23903022	Socket, 8P
BB15B	23903022	Socket, 8P
BB15C	23368627	Plug, 8P
BB16A	23903022	Socket, 8P
BB16B	23903022	Socket, 8P
BB16C	23368627	Plug, 8P
E935	23710134	Screw, SCREW PP4
E943	23710134	Screw, SCREW PP4
E956	23710134	Screw, SCREW PP4
E966	23960136	Adhesive, TSE3843-W
E976	23960136	Adhesive, TSE3843-W
E986	23960136	Adhesive, TSE3843-W
⚠F801	23144458	Fuse, 5.0A, 250V
F801A	23165433	Holder, Fuse
F801B	23165433	Holder, Fuse
G101	23238506	Coil, Peaking, TRF4229AJ
G102	23238506	Coil, Peaking, TRF4229AJ
G106	23289109	Coil, Peaking, TRF41R0AF
G431	23237975	Coil, Peaking, TRF4101AC
G510	23289479	Coil, Peaking, TRF44R7AF
GA69	24366470	CF, 47 ohm
GY102	23238506	Coil, Peaking, TRF4229AJ
GY103	23238506	Coil, Peaking, TRF4229AJ
GY104	23237995	Coil, Peaking, TRF4229AC
HY02	23148327	Module, MVCM13, PIP
KB01	23904946	Remote Sensor, RPM-676CBR-S
P101	23164558	Plug, 8P
P513	23903040	Socket, 56P
P661	23363607	Jack, Headphone
P708	23902655	Socket, B-B, 15P
P709	23902655	Socket, B-B, 15P
P720	23164786	Plug, 6P
⚠P801	23372023	Power Cord (50D9UXE/50D9UXH)
⚠P801	23372026	Power Cord (50D9UXA)
PB12	23164560	Plug, 6P
PF01A	23367724	Plug, B-B,15P (50D9UXE/50D9UXA)
PF01B	23902655	Socket, B-B, 15P
PU01A	23368634	Plug, 25P
PU01B	23903025	Socket, 25P
PU02A	23368634	Plug, 25P
PU02B	23903025	Socket, 25P
PU11	23902655	Socket, B-B, 15P
PU12	23902781	Socket, B-B, 12P
PV01	23365837	Jack, 1S6P
PV02	23365966	Jack, 1S6P
PV04	23164563	Plug, 3P
PV06	23365972	Jack, 6P
PV62	23164558	Plug, 8P
PY630	23363607	Jack, Headphone
S601	23145411	Switch, Slide, 2C2P
⚠S801	23145434	Switch, Power, 2C2P
SA01	23145226	Switch, Push, 1C1P

Location No.	Part No.	Description
SA02	23145226	Switch, Push, 1C1P
SA03	23145226	Switch, Push, 1C1P
SA04	23145226	Switch, Push, 1C1P
SA06	23145226	Switch, Push, 1C1P
SA07	23145226	Switch, Push, 1C1P
⚠SR80	23146574	Relay, DLS5D1-O(M) 0.15W
⚠SR81	23146574	Relay, DLS5D1-O(M) 0.15W
⚠V901A	23902019	Socket, CRT, 9P
⚠V902A	23902019	Socket, CRT, 9P
⚠V903A	23902019	Socket, CRT, 9P
W661	23151232	Speaker, SPK-1235, 160X160mm, 8 ohm
W662	23151232	Speaker, SPK-1235, 160X160mm, 8 ohm
X401	23153721	Ceramic Resonator, 503kHz, TCR1023
X501	23153438	Crystal, 16.200MHz
X4401	23153721	Ceramic Resonator, 503kHz, TCR1023
XA01	23153497	Crystal, 16.0 MHz
XF01	23153421	Crystal, 20.48MHz (50D9UXE/50D9UXA)
⚠Z410	23110842	Focus Pack, TPA6031
⚠Z410A	23505177	Focus Cable
⚠Z450	24082996	CR Block, TPA5007BH
⚠Z450A	23504953	Anode Cable
Z801	23148734	Module, HIC1026A, PROTECTOR, HIC1026
Z803	23148755	Module, SLI-MI-06, DC/DC CONVERTER
Z830	23144609	Protector, PRF5000PRT, DC60V, 5.0A
Z831	23144603	Protector, PRF10005PRT, DC60V, 1.0A
Z853	23144608	Protector, PRF40005PRT, DC60V, 4.0A
Z854	23144609	Protector, PRF5000PRT, DC60V, 5.0A
Z856	23144605	Protector, PRF20005PRT, DC60V, 2.0A
Z857	23144607	Protector, PRF31505PRT, DC60V, 3.15A
Z858	23144610	Protector, PRF63005PRT, DC60V, 6.3A
Z859	23144610	Protector, PRF63005PRT, DC60V, 6.3A
Z860	23144608	Protector, PRF40005PRT, DC60V, 4.0A
Z901	23103839	Ferrite Core, TFE1012 (50D9UXE/50D9UXA)
Z902	23103839	Ferrite Core, TFE1012 (50D9UXE/50D9UXA)
ZC01	23148757	Module, CM50DP30H, CONVER50
ZT01	23153736	Ceramic Resonator, TCR1025
ZY01	23148722	Module, MKMP32A, MULTI PICTURE MKM
ZY02	23148747	Module, MYCJ32, 3D-YCS COMB
ZY03	23148761	Module, TMA201A, SCAN CONVERTER, DFS

Location No.	Part No.	Description
PC BOARD ASSEMBLIES		
* M021Z		RMT IN Board, PB9092-1
* M022Z		FRT IN Board, PB9092-2
* M023Z		FRT CON Board, PB9092-3
* M031Z		CRT-D/R Board, PB9752-1
* M032Z		CRT-D/G Board, PB9752-2
* M033Z		CRT-D/B Board, PB9752-3
* M034Z		SVM-G Board, PB9752-4
* M035Z		SVM-R Board, PB9752-5
* M036Z		SVM-B Board, PB9752-6
* U401		DEF Board, PB9731
* U701		CONV. OUT Board, PB9749
* U801		Power Board, PB9748
* U901		Signal Board, PB9738 (50D9UXE/50D9UXA)
* U901		Signal Board, PB9740 (50D9UXH)
* U902		VCD Board, PB9747
* UM01		TEXT Board, PB9745 (50D9UXE/50D9UXA)
* UV01		BACK AV Board, PB9746
PICTURE TUBE		
⚠V901R	23005845	Protector Coupling 50R
⚠V902G	23005846	Protector Coupling 50G
⚠V903B	23005847	Protector Coupling 50B
TUNER		
H001	23321393	Tuner, EC954LW
HY01	23321384	Tuner, ECA32LX2
ACCESSORIES		
K902	23306246	Remote Hand Unit, CT-9933 (50D9UXE/50D9UXA)
K902	23306245	Remote Hand Unit, CT-9932 (50D9UXH)
AT03	23588255	Battery Cover
Y101E	23565061	Owner's Manual, English, 50D9UXE/50D9UXH/50D9UXA
Y101C	23565062	Owner's Manual, Hong Kong, 50D9UXH
Y109	23943846	Cover, Poly

CABINET PARTS		
A101	23411259	Wood Cabinet
A107	23549746	Rear Board Cover
A109	23564457	Label (50D9UXE)
A109	23564675	Label (50D9UXH)
A109	23564608	Label (50D9UXA)
A126	23445281	Button, Catch Male
A127	23445281	Button, Catch Male
A151	23525992	Case
A152	23935939	Packing, Bottom
A169	23730162	Screw, Wood
A171	23805157	Handle
A175	23436661	Caster
A202	23450181	Front Panel
A203	23527093	Speaker Grille R
A204	23527095	Speaker Grille L
A213	23427871	Door
A224	23445308	Knob, Control

Location No.	Part No.	Description
A225	23445309	Knob, Power
A322	23445282	Button, Catch Female
⚠A401	23549658	Back Board Cover
A505	72471068	Screw, BIDT2 4X12BZ
A506	23035412	Screw, BTB4X12SZN
A512	23035412	Screw, BTB4X12SZN
A519	72471068	Screw, BIDT2 4X12BZ
A520	23037310	Screw, BTBW 3X10SZN
A701	23064320	Case (50D9UXE)
A701	23064370	Case (50D9UXH)
A701	23064342	Case (50D9UXA)
A702	23935938	Packing, Top
A703	23845450	Joint
K501	23430817	Lenti Sheet, SCREEN50KKHL
K502	23430799	Fresnel Sheet, SCREEN50KKPF
K601	23430509	Mirror, MIRROR50H

Location No.	Part No.	Description

SIGNAL BOARD PB9738

BOTTOM (FOIL) SIDE

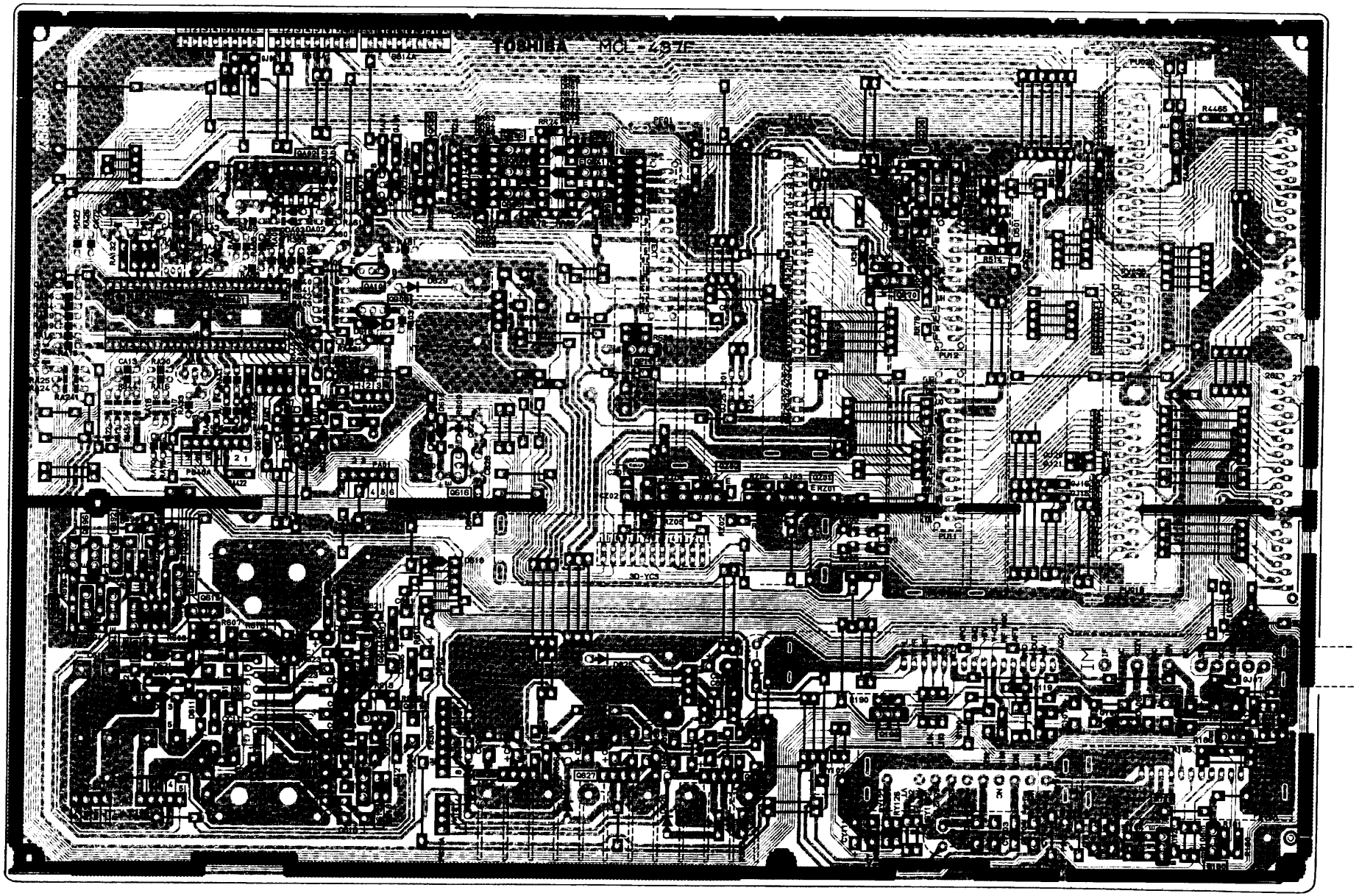

SIGNAL BOARD

BOTTOM (FOIL) SI

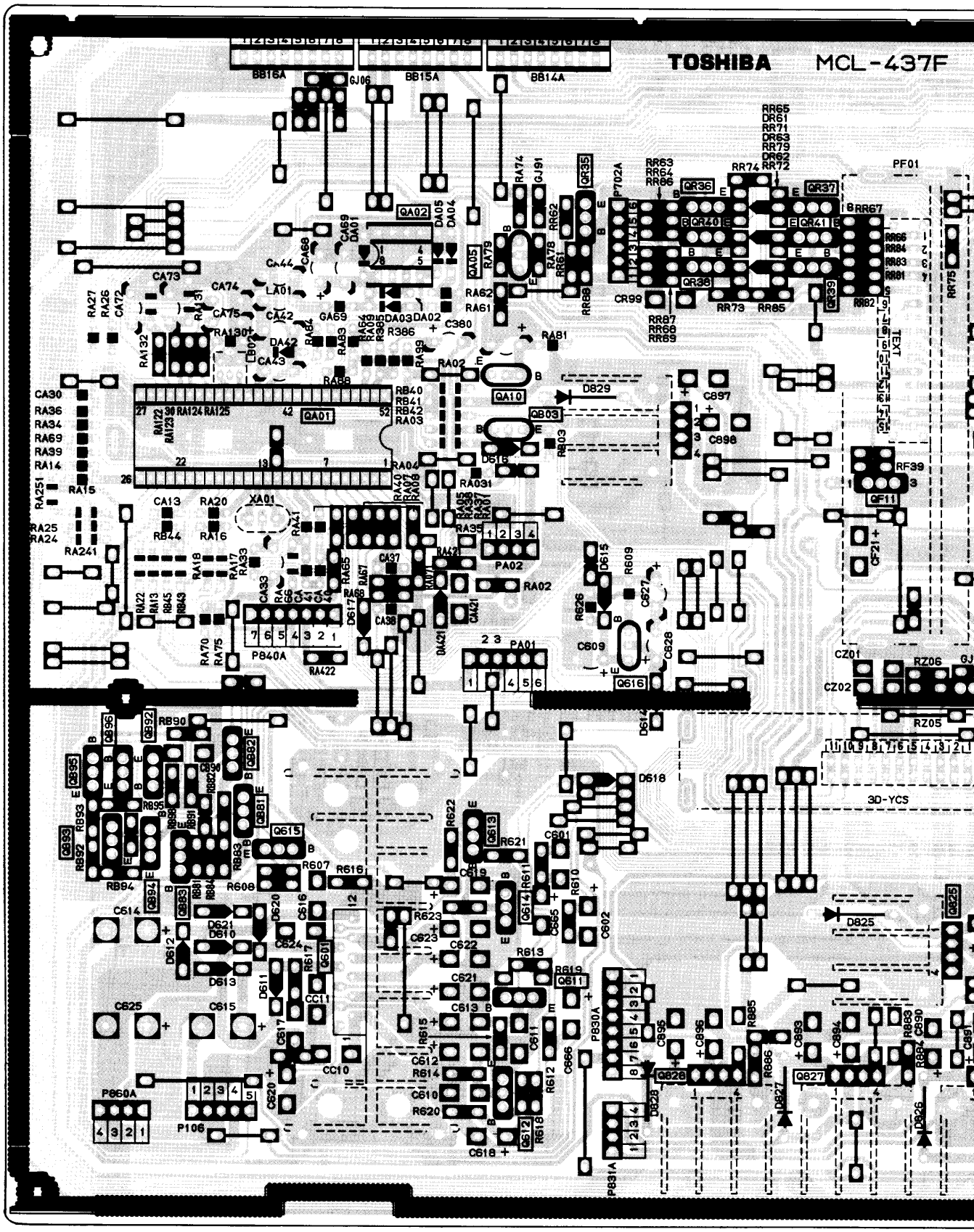

AL BOARD PB9738

BOTTOM (FOIL) SIDE

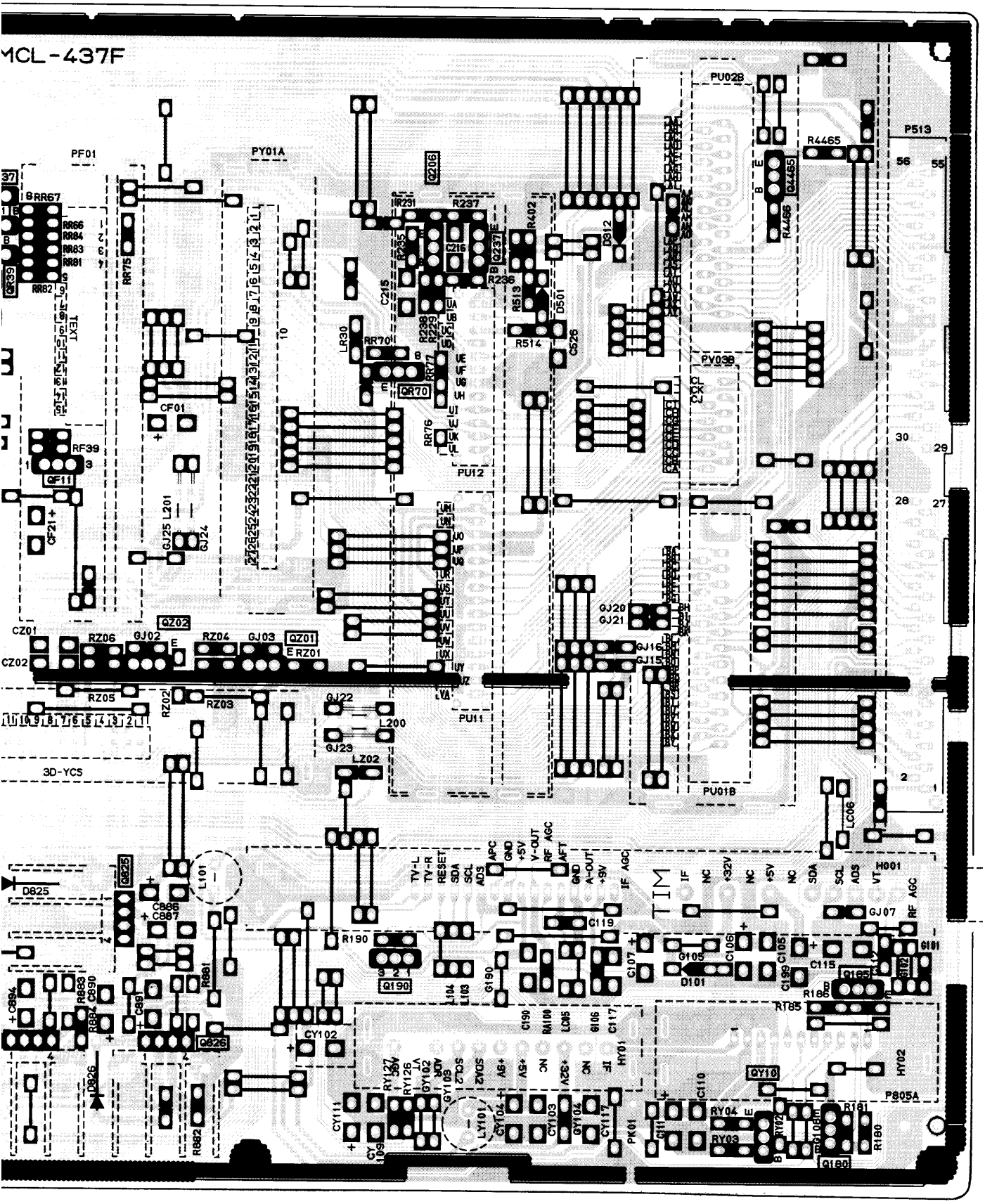

POWER BOARD PB9748

BOTTOM (FOIL) SIDE

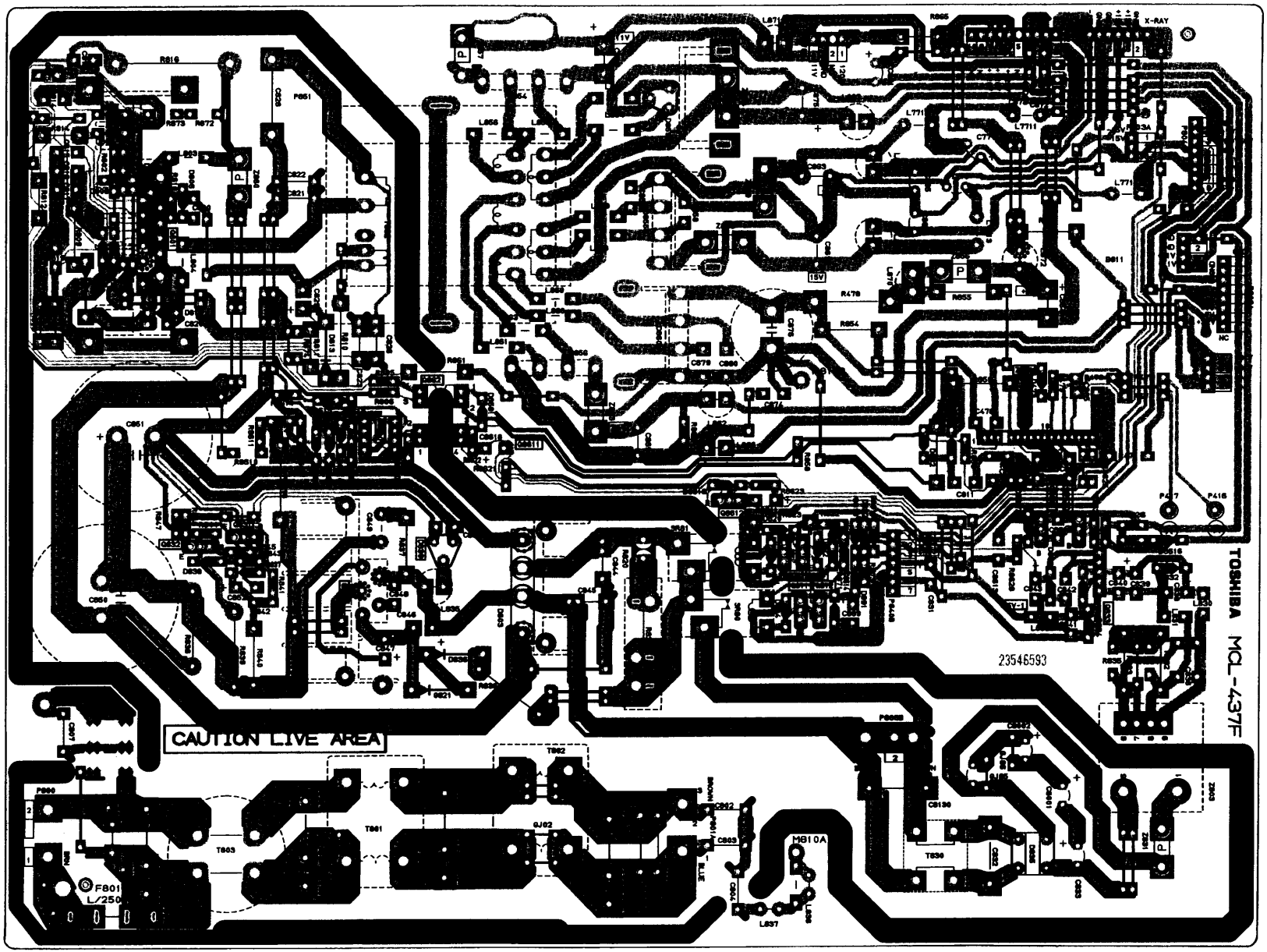

POWER BOARD

BOTTOM (FOIL)

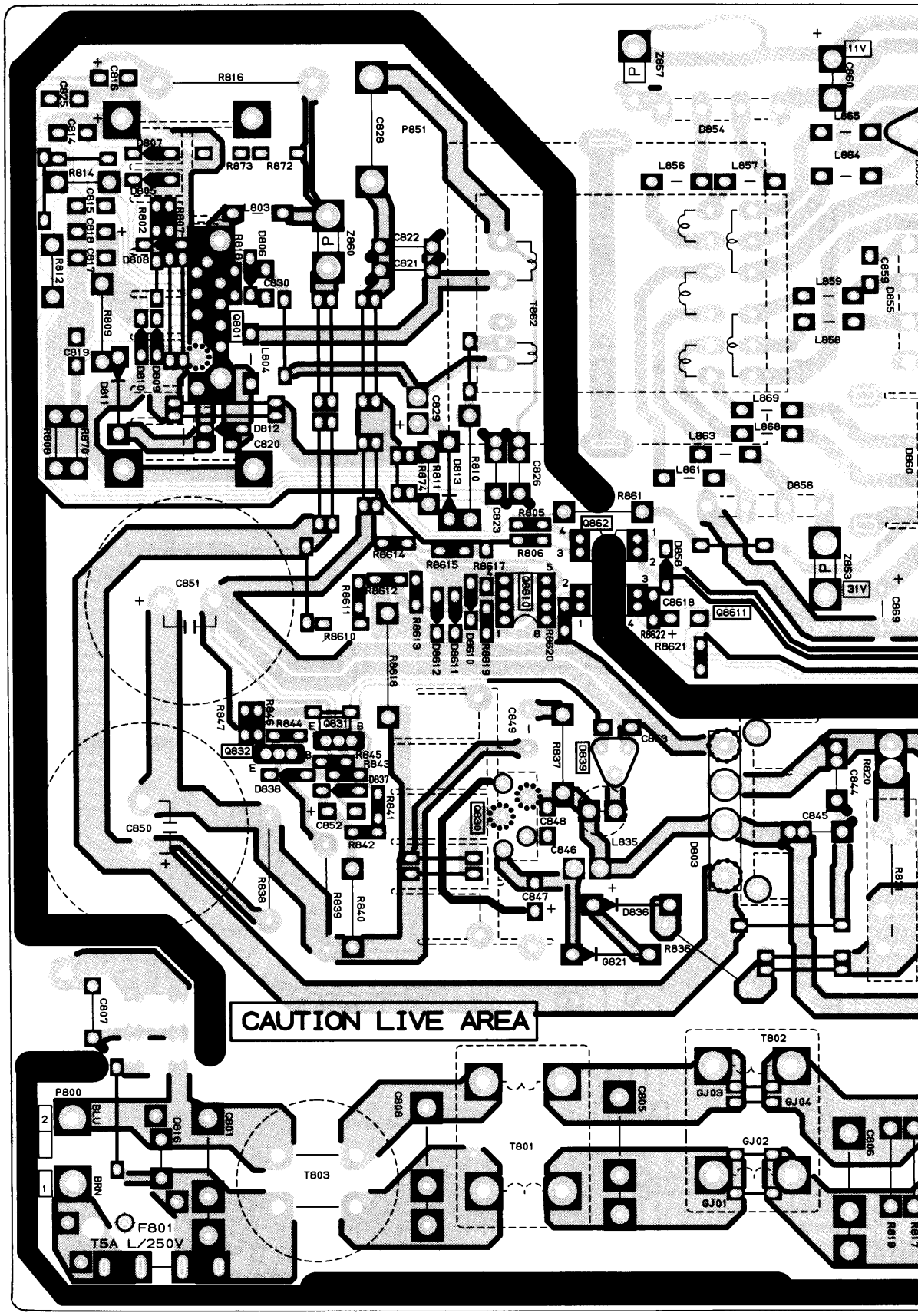

VER BOARD PB9748

BOTTOM (FOIL) SIDE

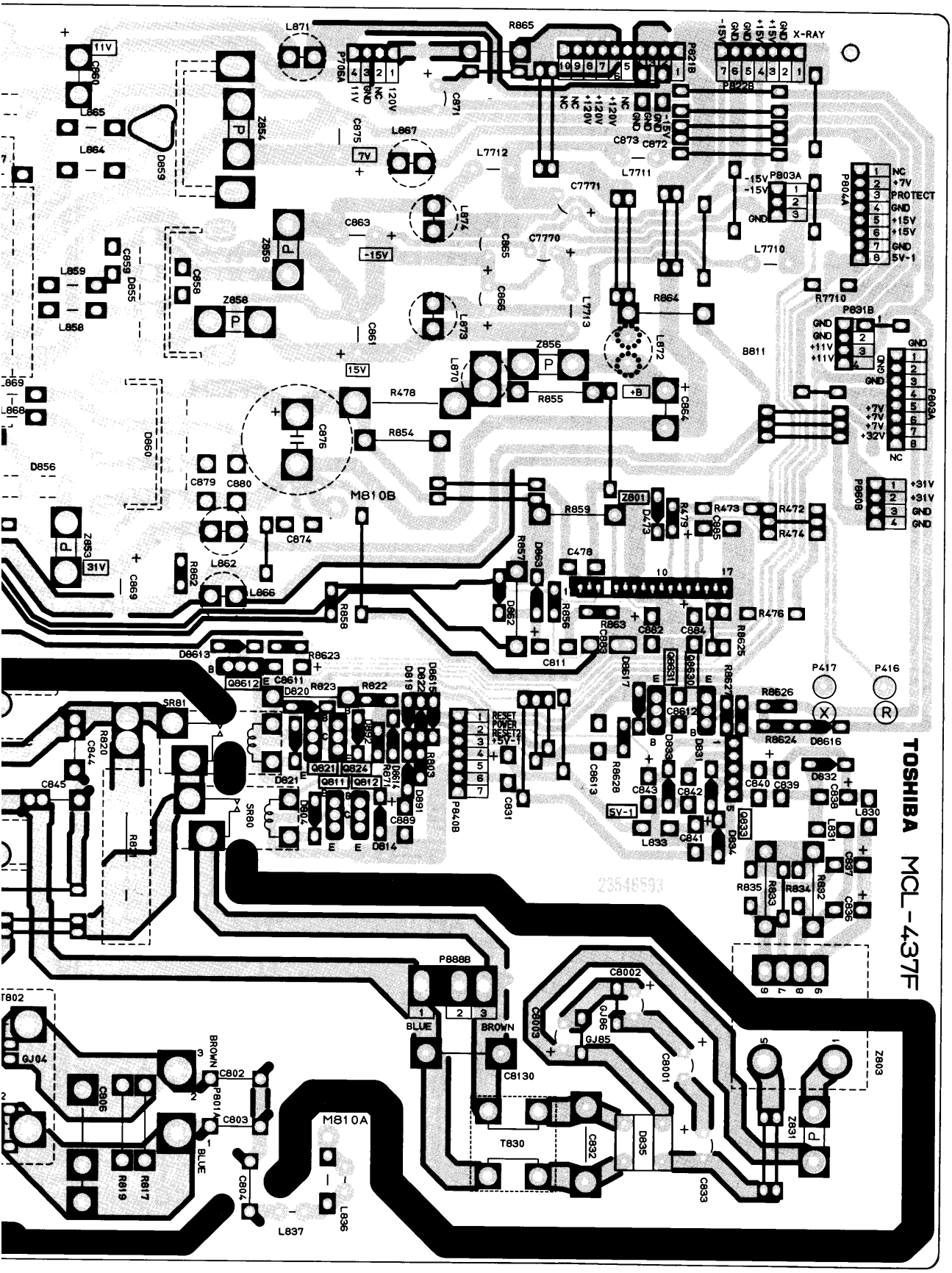

DEF BOARD PB9731

BOTTOM (FOIL) SIDE

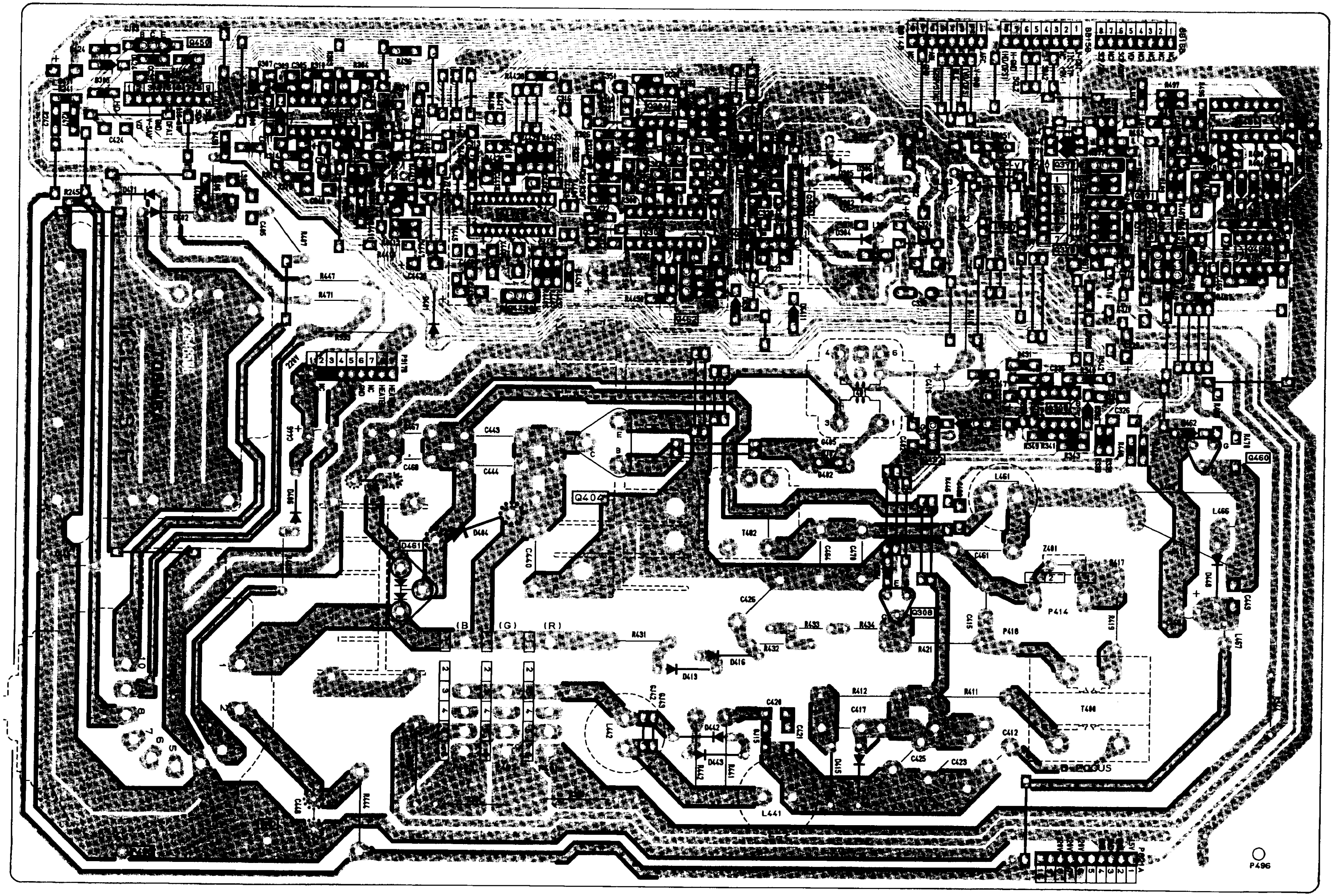

DEF BOARD P

BOTTOM (FOIL) S

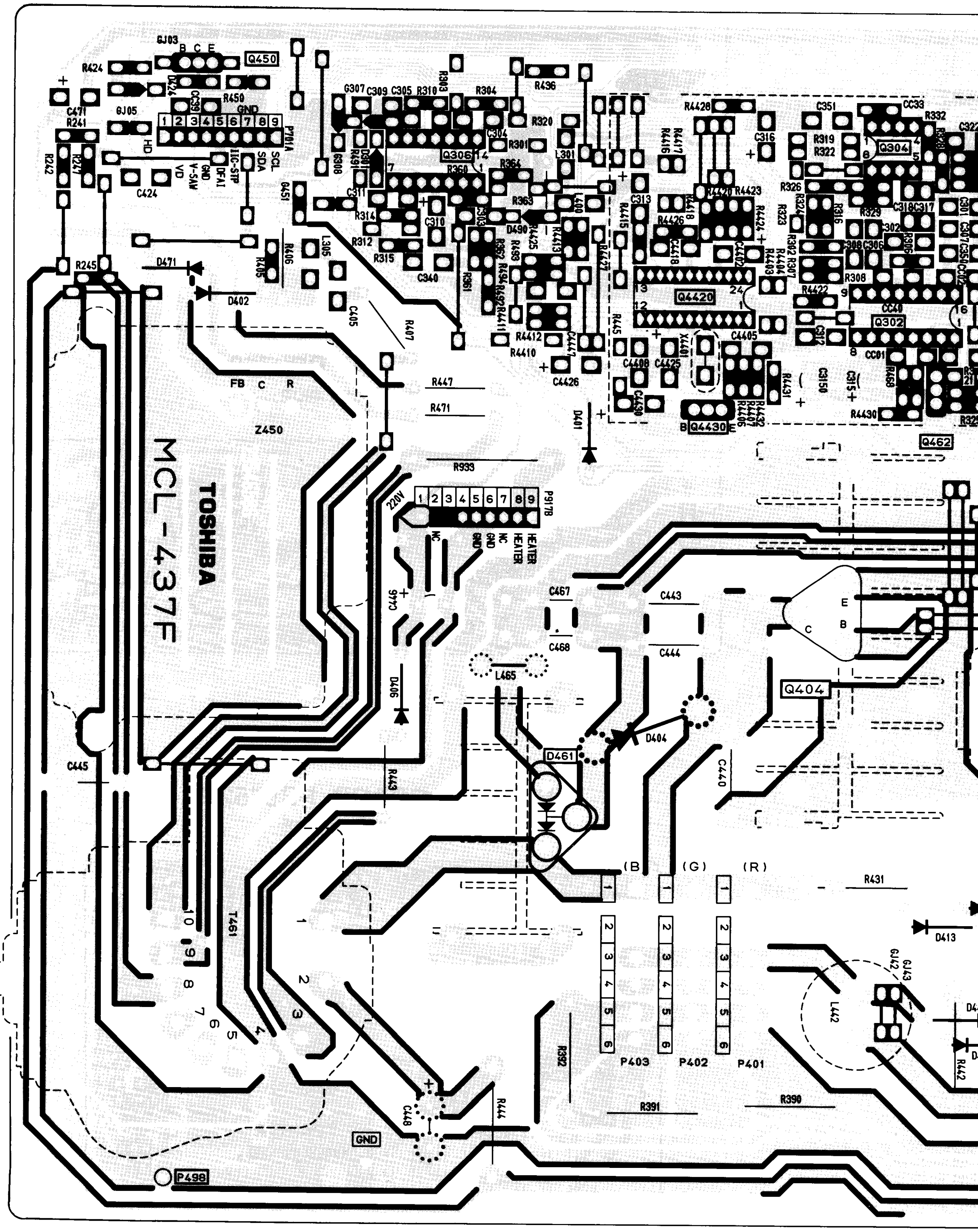

F BOARD PB9731

BOTTOM (FOIL) SIDE

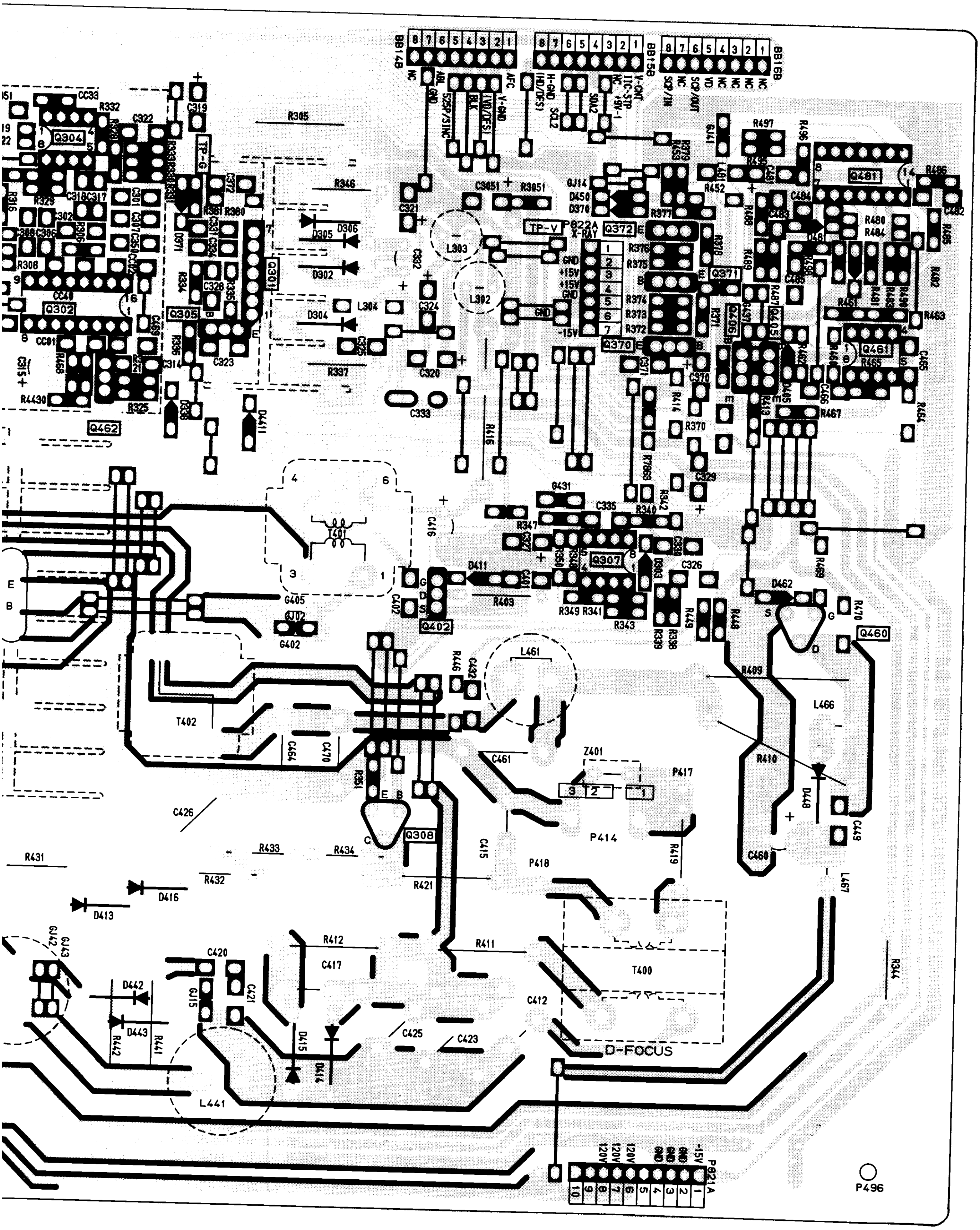

R-DRIVE BOARD PB9752-1

BOTTOM (FOIL) SIDE

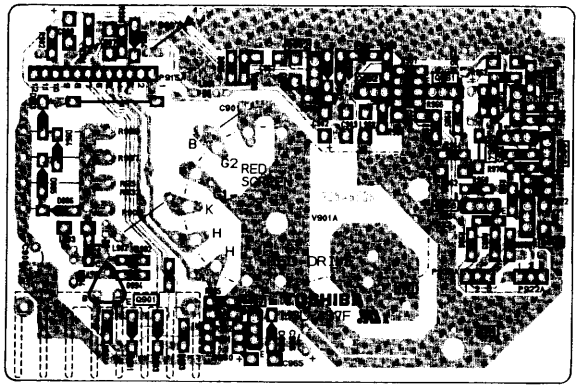

G-DRIVE BOARD PB9752-2

BOTTOM (FOIL) SIDE

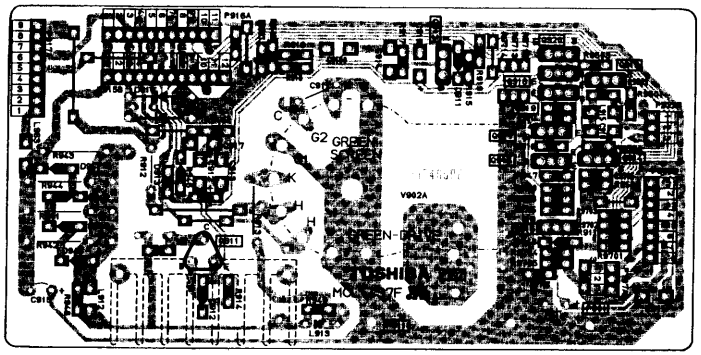

SVM-G BOARD PB9752-4

BOTTOM (FOIL) SIDE

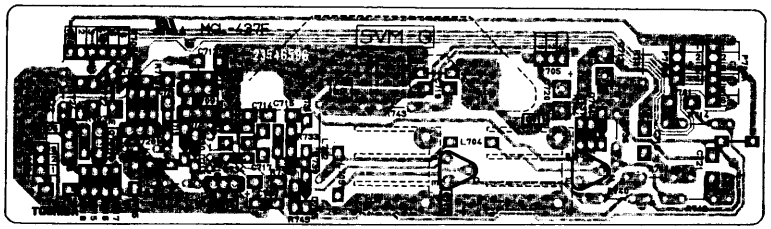

SVM-R BOARD PB9752-5

BOTTOM (FOIL) SIDE

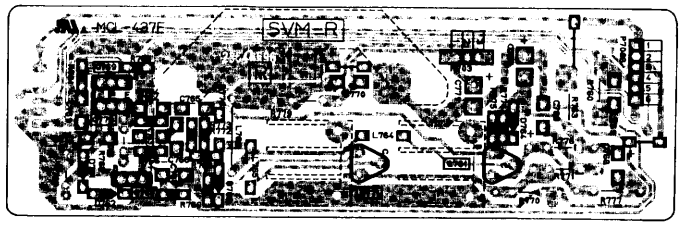

SVM-B BOARD PB9752-6

BOTTOM (FOIL) SIDE

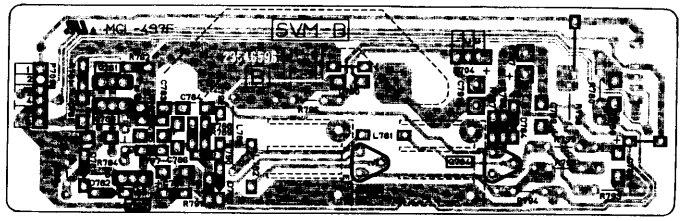

B-DRIVE BOARD PB9752-3

BOTTOM (FOIL) SIDE

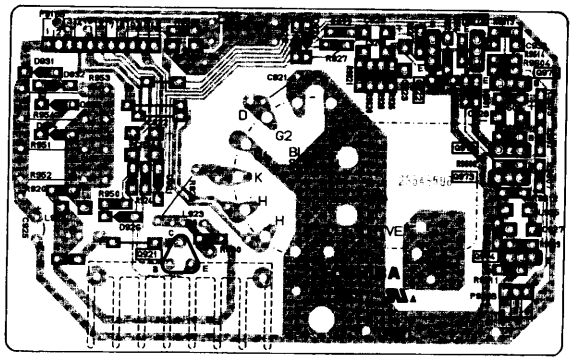

R-DRIVE BOARD PB9752-1

BOTTOM (FOIL) SIDE

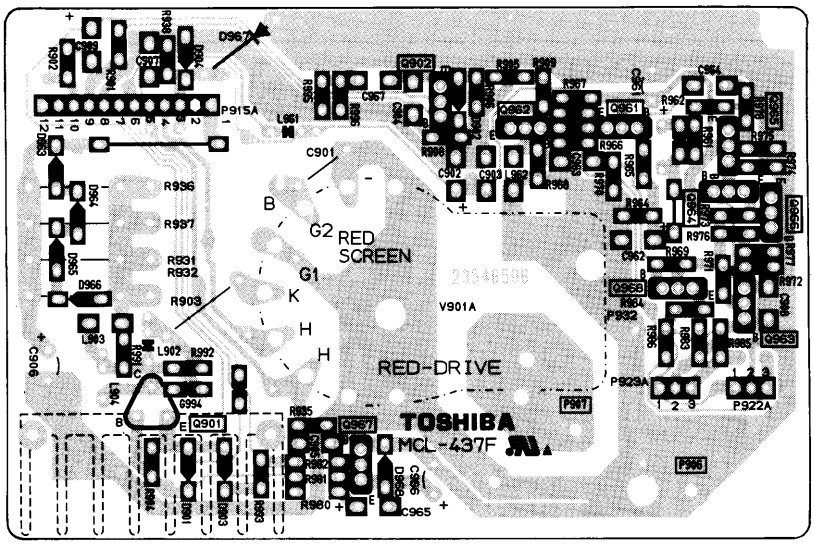

G-DRIVE BOARD PB9752-2

BOTTOM (FOIL) SIDE

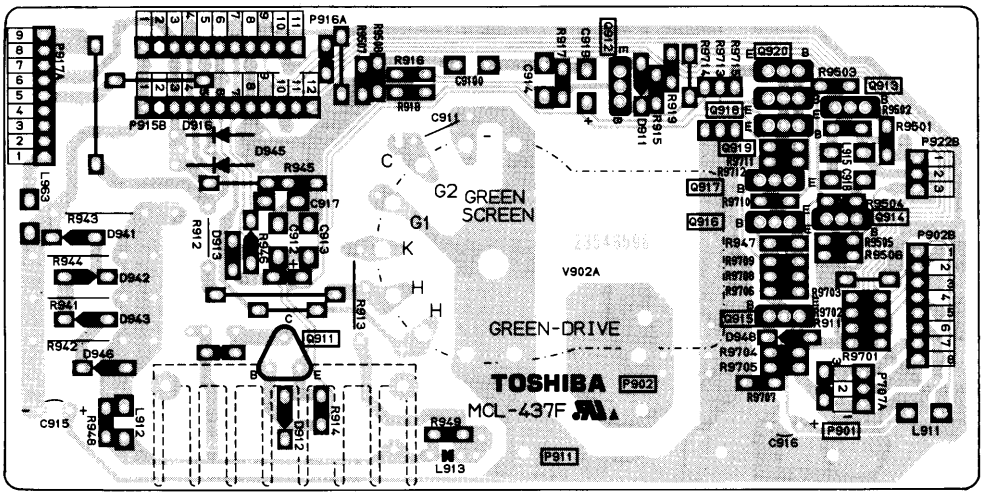

SVM-G BOARD PB9752-4

BOTTOM (FOIL) SIDE

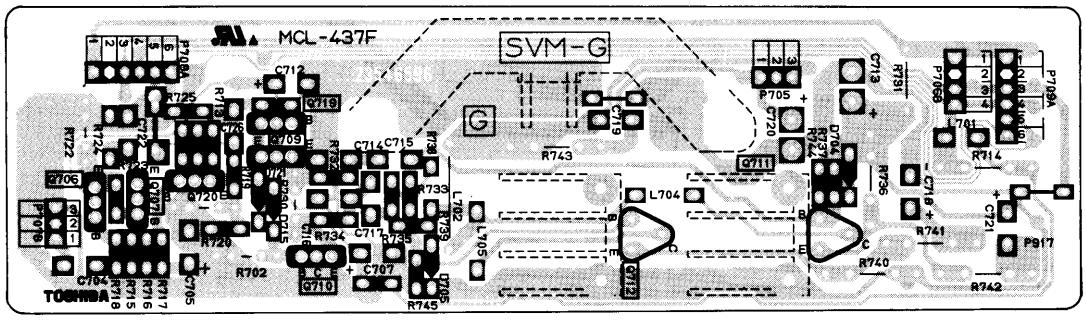

SVM-R BOARD PB9752-5

BOTTOM (FOIL) SIDE

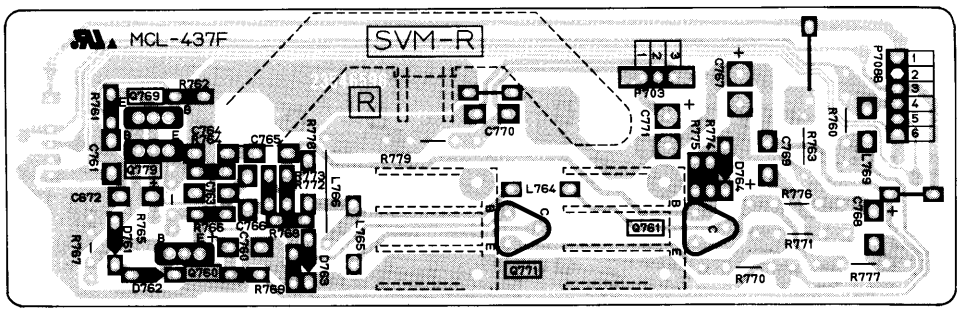

SVM-B BOARD PB9752-6

BOTTOM (FOIL) SIDE

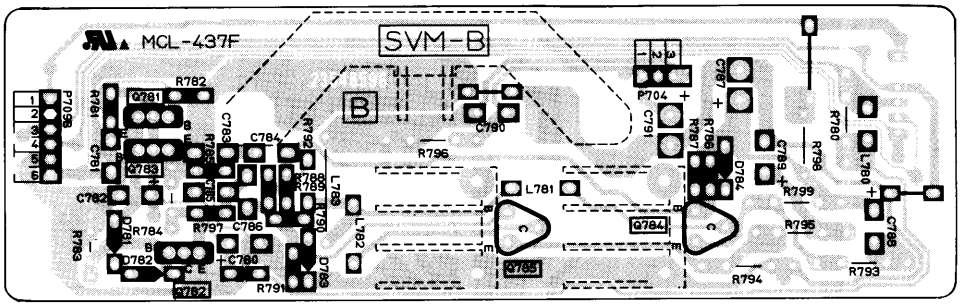

B-DRIVE BOARD PB9752-3

BOTTOM (FOIL) SIDE

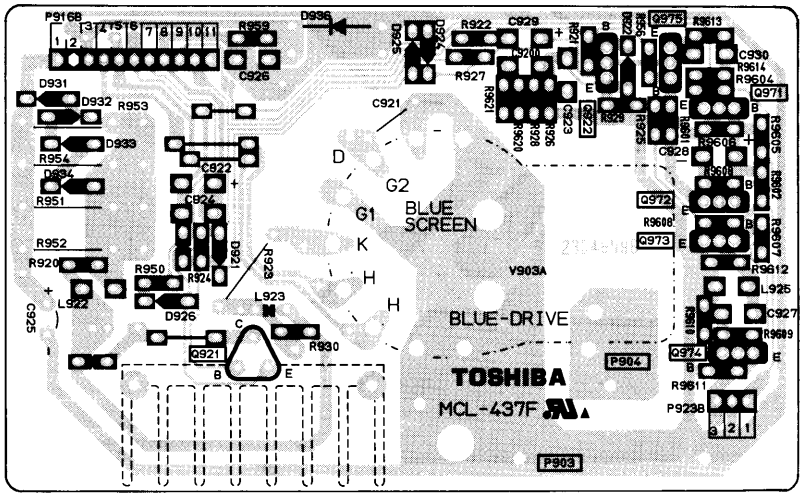

BACK/AV BOARD PB9746

BOTTOM (FOIL) SIDE

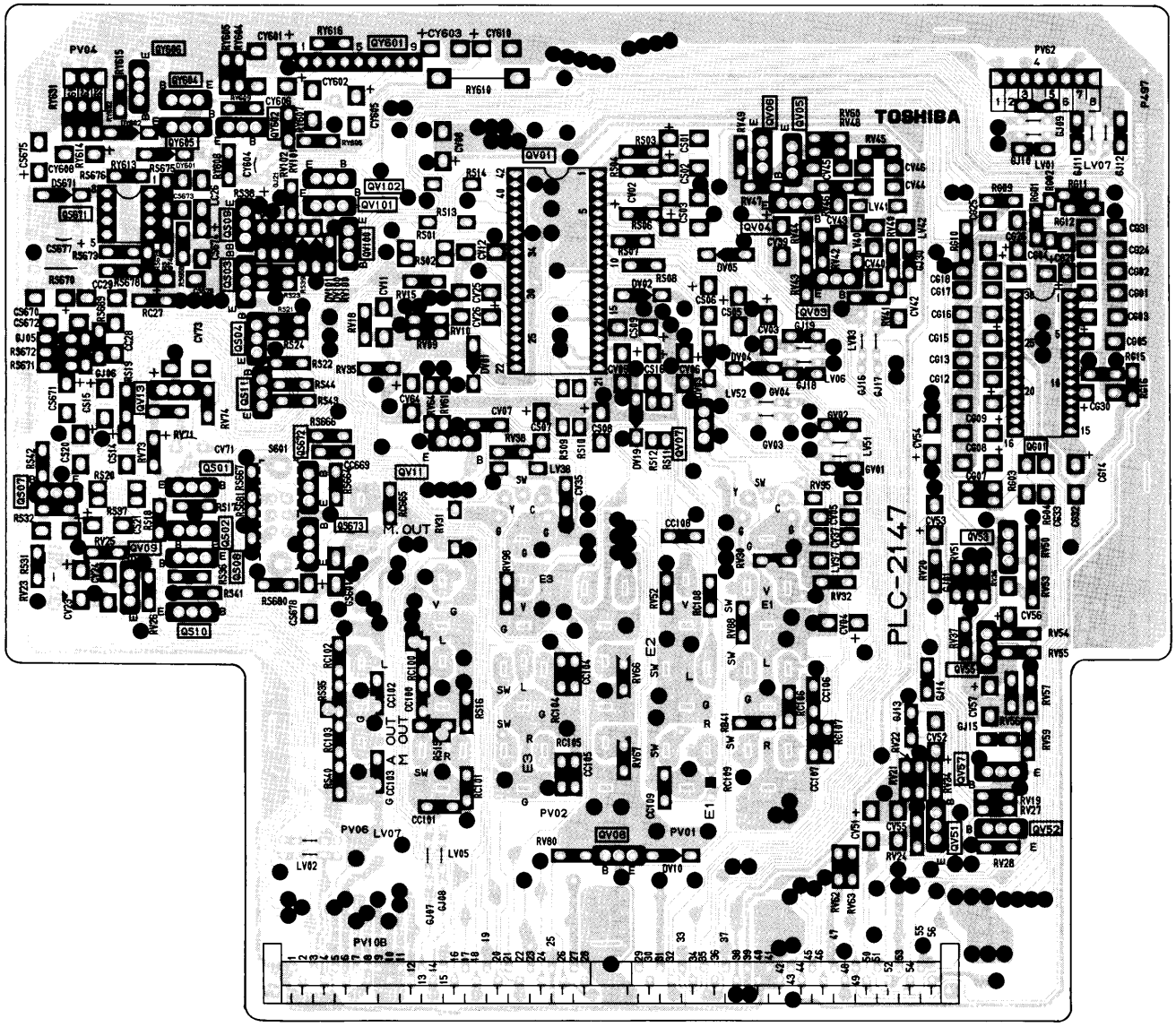

FRONT IN BOARD PB9092-2

BOTTOM (FOIL) SIDE

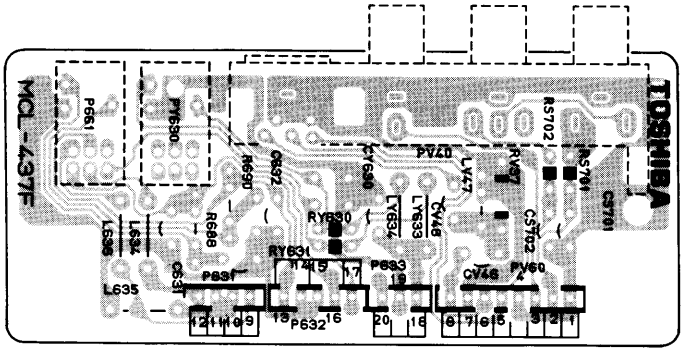

RMT IN BOARD PB9092-1

BOTTOM (FOIL) SIDE

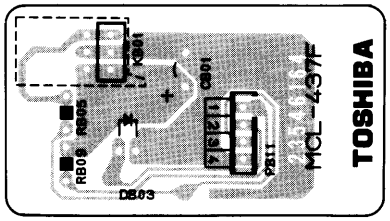

FRONT CONTROL BOARD PB9092-3

BOTTOM (FOIL) SIDE

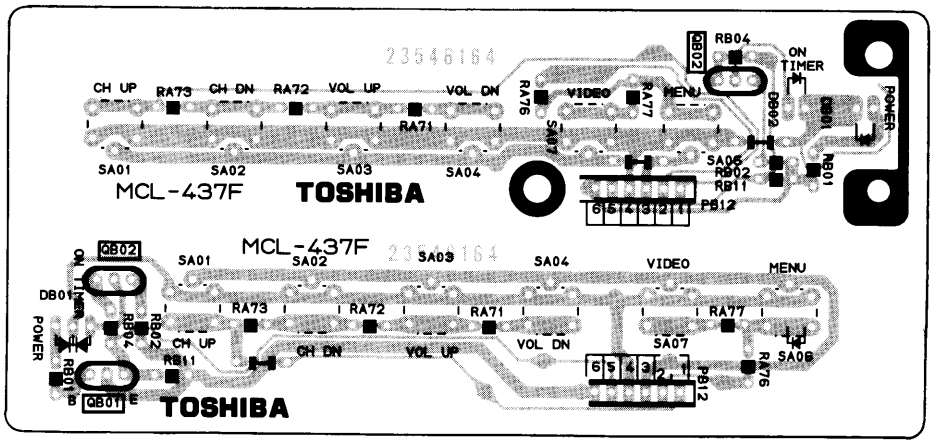

TEXT BOARD PB9745

BOTTOM (FOIL) SIDE

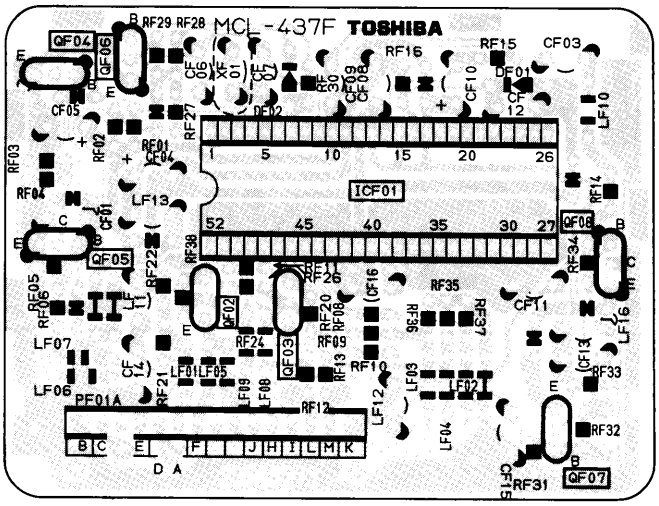

V/C/D BOARD PB9747

BOTTOM (FOIL) SIDE

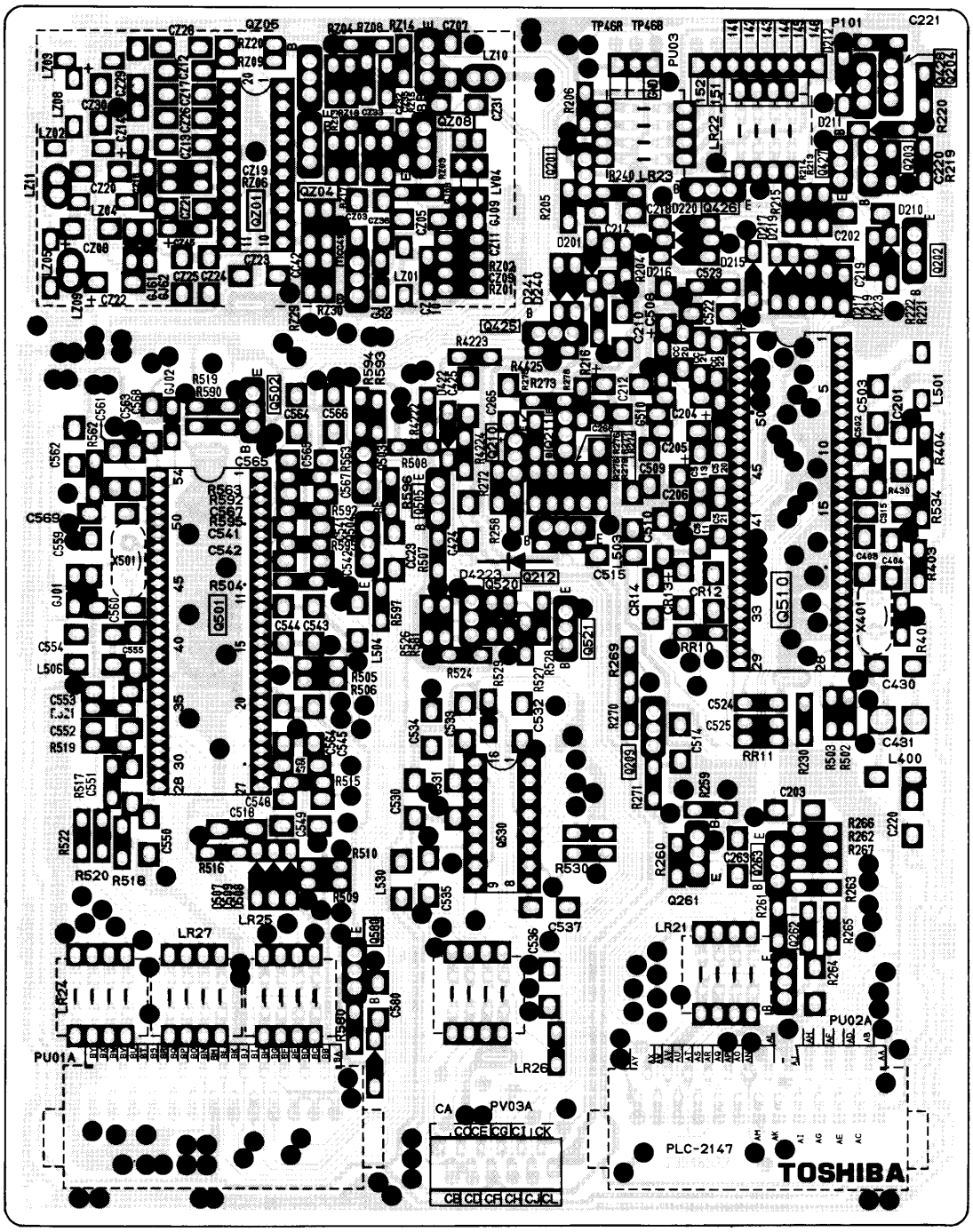

CONV/OUT CONTROL BOARD PB9749

BOTTOM (FOIL) SIDE

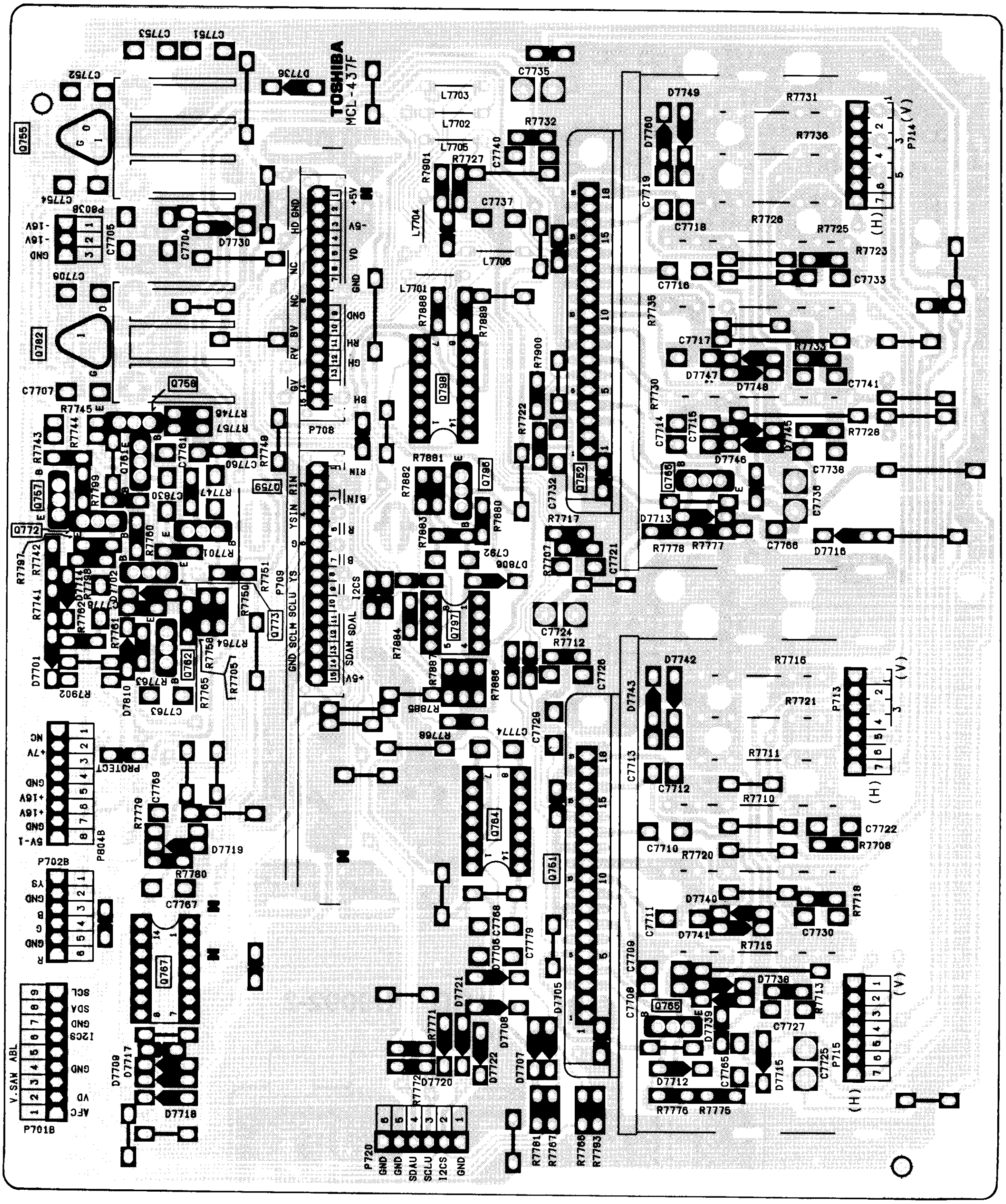

TERMINAL VIEW OF TRANSISTORS

① 2SD2253
(old)
2SC5243

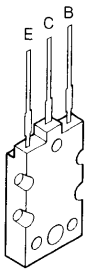

② 2SC3852
2SD1763A
2SC1569
2SC4544
2SA1788
2SA1306
2SA1186A

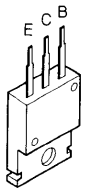

③ 2SC752GTM
2SC2482
2SC2655
2SC4721P

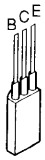

④ 2SC752
2SA562TM
2SA1015
2SC1815
2SC2878
2SC1740S
2SC2120
2SA9335

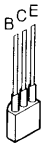

⑤ 2SA1788

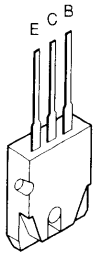

⑥ RN2203
RN2201
RN2004
RN1203
RN1204
RN2204
RN1205
RN1202
RN1201

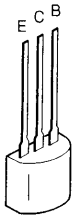

⑦ 2SD1554
2SD2253
2SD1556
2SC5143
2SD2553
2SC5144

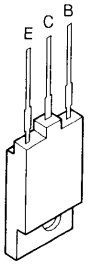

⑧ ON4409

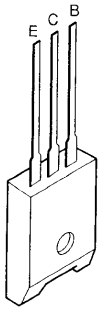

SPECIFIC INFORMATIONS

MEMO

MEMO

MEMO

SPECIFICATION		Representative: 50D9UXE
Rated voltage		∿ 110 V – 127 V, 220 V – 240 V, 50/60 Hz
Power consumption (at ∿ 220 V, 50 Hz)		260 W
Dimensions (Width × Depth × Height)		1073.2 mm × 528.7 mm × 1296 mm
Mass		110 kg
Picture tube		Type 50(126 cm)
Television system (Aerial input)	Channel coverage	**System** **VHF** **UHF** **CATV (Channel)** PAL B/G (CCIR) 2 – 12 21 – 69 X ~ Z+2, S1 ~ S41 PAL I (UK) — 21 – 69 — PAL D/K (CHINA) 1 – 12 13 – 57 Z–1 ~ Z–38 SECAM B/G (CCIR) 2 – 12 21 – 69 X ~ Z+2, S1 ~ S41 SECAM D/K (OIRT) 1 – 12 21 – 69 X1 ~ X19 NTSC M (US) 2 – 13 14 – 69 A–6 ~ A–1, A ~ W, AA ~ ZZ, AAA, BBB NTSC M (JAPAN) 1 – 12 13 – 62 M1 ~ M10, S1 ~ S41
	Special RF signal	**Colour system** **Sound system** NTSC4.43 5.5/6.0/6.5 MHz PAL 60Hz 5.5/6.0/6.5 MHz
Colour system		PAL/SECAM/NTSC4.43/NTSC3.58
Sound output		14W + 14W
Accessories		• Remote controller × 1 • Caster trays × 4 • Batteries (R03, AAA) × 2 • AC adaptor × 1 (50D9UXM/61D9UXM only)

* Please refer to owner's manual in detail.